Boardmonitor/Controlunit 22 SY 401/23B

Service
Service
Service

22 SY 401/23B
22 SY 401/23F
22 SY 401/23L
22 SY 401/23R
22 SY 401/23T

Service Manual

12 V

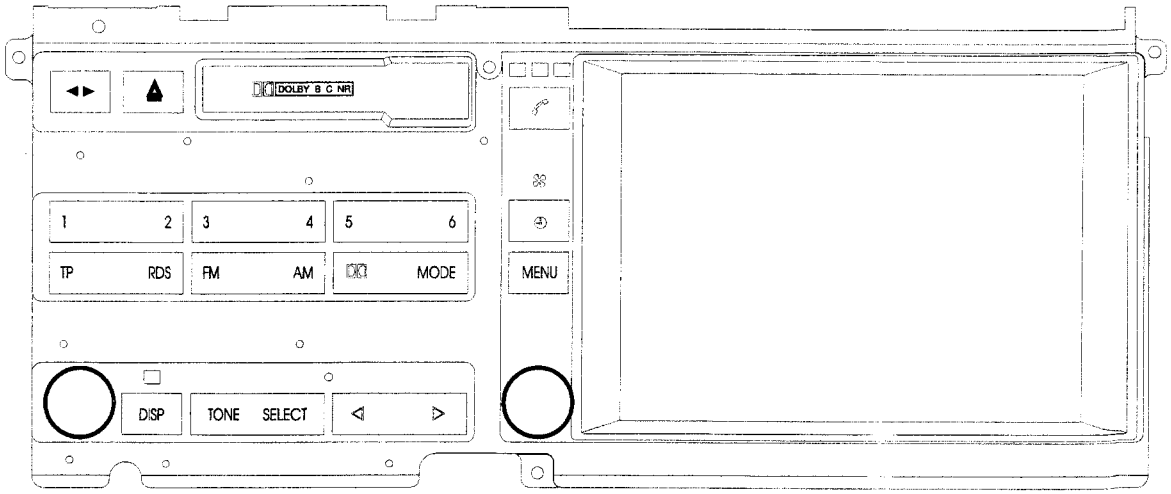

Published by Philips Car Sytems Printed in the Netherlands © Copyright reserved Subject to modification 4822 725 23519

PCS 79 862

PHILIPS

CONTENTS

Page 2	General hint, technical datas
Page 3	System configuration
Page 4+5	Versions
Page 6	Controls
Page 7	Connectorblocks, default settings
Page 8	Service mode
Page 9	Checks
Page 10	Front PWB's
Page 11	Front circuit
Page 12	Main PWB (A)
Page 13	Main PWB (B)
Page 14	Control circuit
Page 15	AF circuit
Page 16+17	Exploded views, mechanical parts
Page 18	Electrical partslist

GENERAL

The Bordmonitor - Control unit 22SY401 is part of the BMW System and does not work standalone.
To run this modul you have to build up a system with:

- radiomodul for audio functions only
- radiomodul and videomodul for audio and display functions
- all modules for full operation
- RS 232 - I Bus interface, PC and communication software to simulate functions

TECHNICAL DATA

GENERAL	Power supply:	6 V - 20 V
	Quiescent current:	100 µA
	Playback current:	1 A (max)
CASSETTE DECK	Number of tracks:	2 x 2
	Tape speed:	4,75 cm / s
	Winding time (C60):	< 120 s
	Frequency response:	40 - 14.000 Hz
	Wow and flutter:	0,2% (IEC 386 / DIN 45507)
	S/N ratio (Dolby off):	FE: 48 dB (weighted)
		CR: 53 dB (weighted)
	Noise reduction:	8,5 dB (Dolby B)
		17 dB (Dolby C)
AF AMPLIFIER	Output level:	3 V_{eff}
	Channel separation (1 KHz):	45 dB

Boardmonitor - Control unit
Systemconfiguration

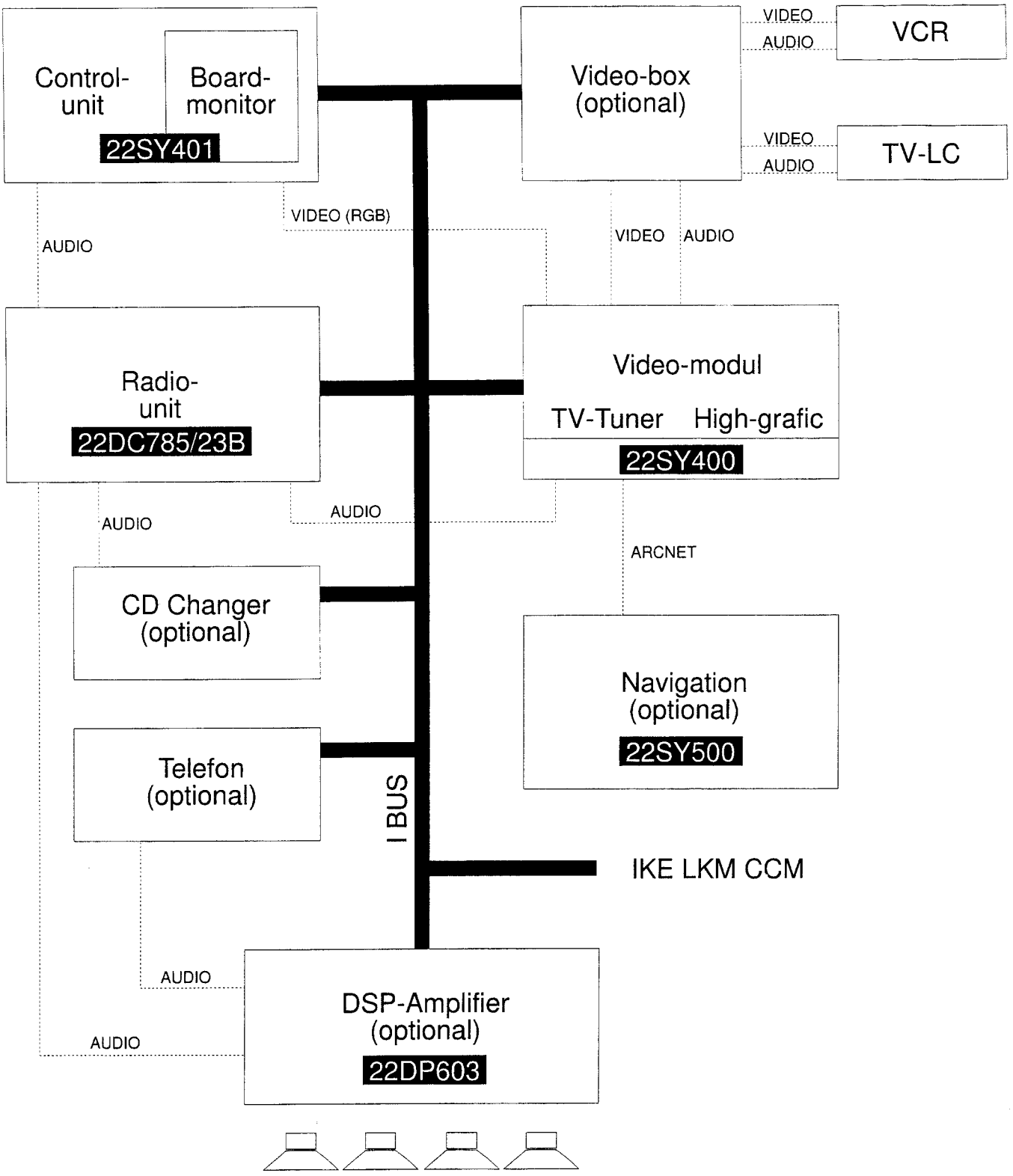

VERSIONS FOR LEFT HAND STEERING

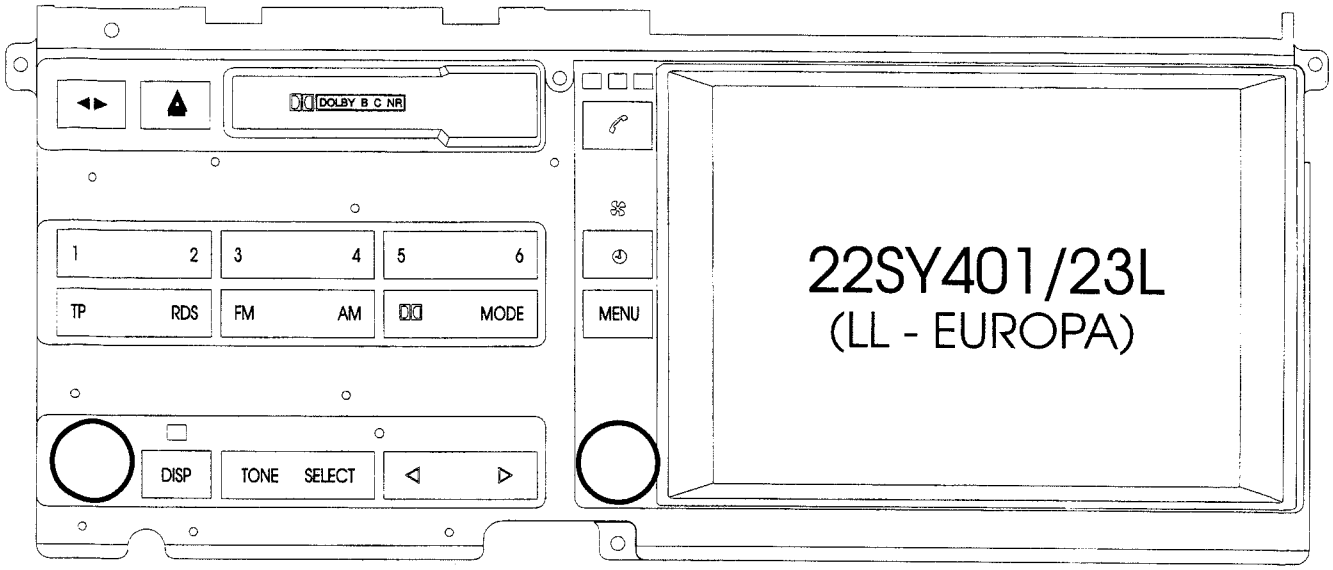

22SY401/23L
(LL - EUROPA)

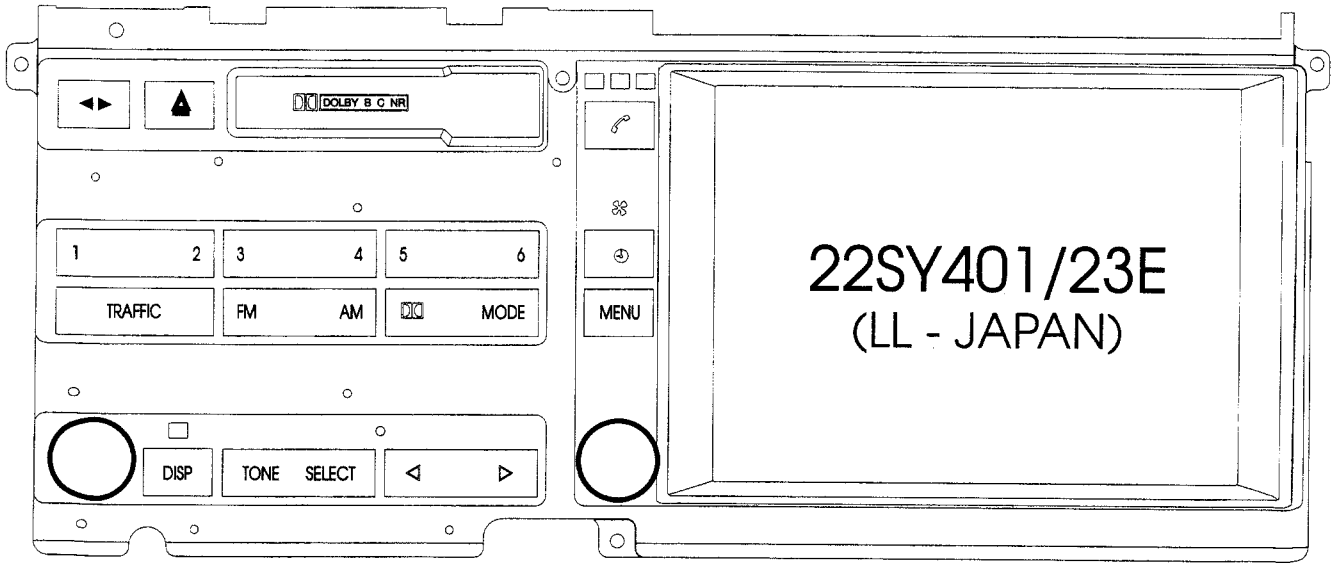

22SY401/23E
(LL - JAPAN)

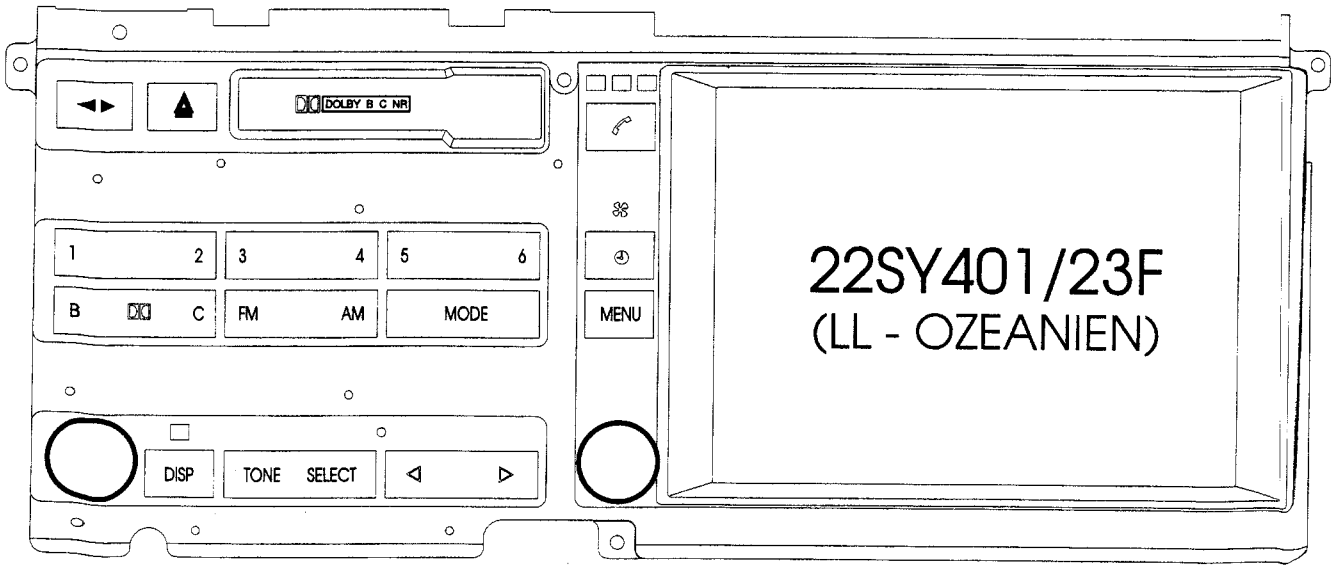

22SY401/23F
(LL - OZEANIEN)

VERSIONS FOR RIGHT HAND STEERING

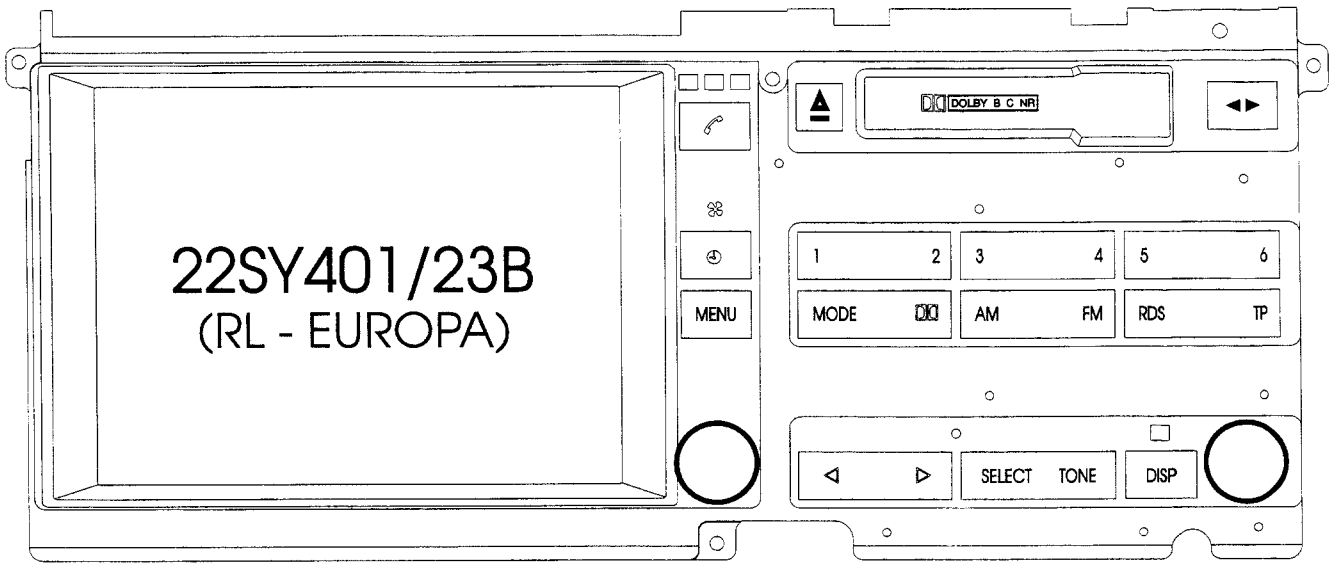

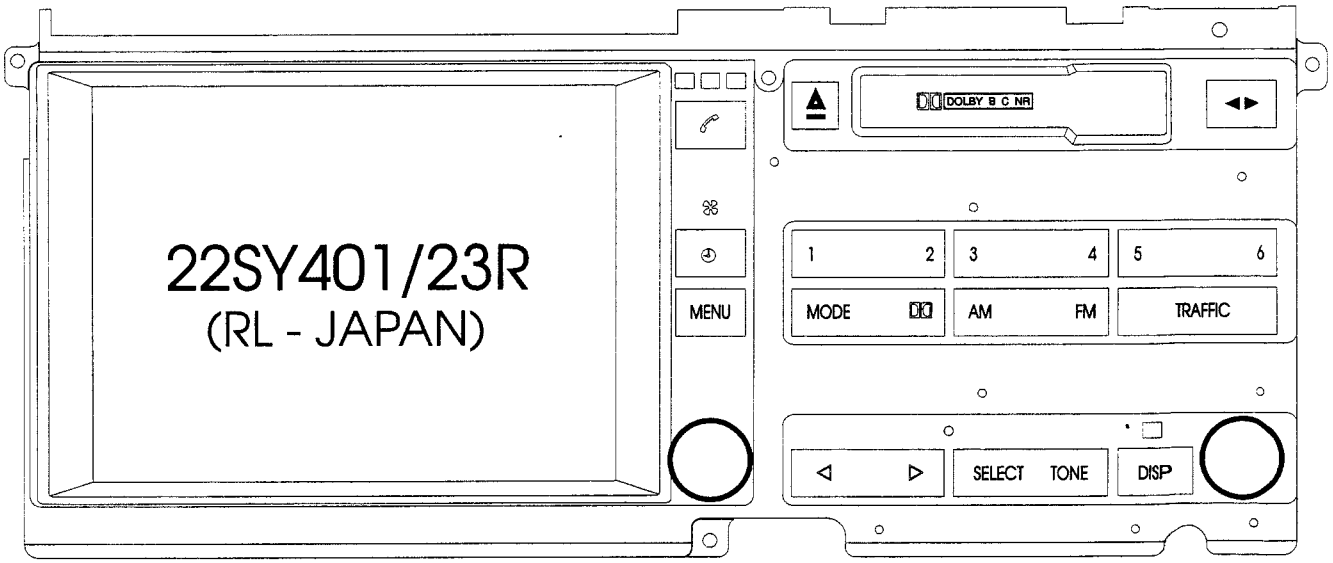

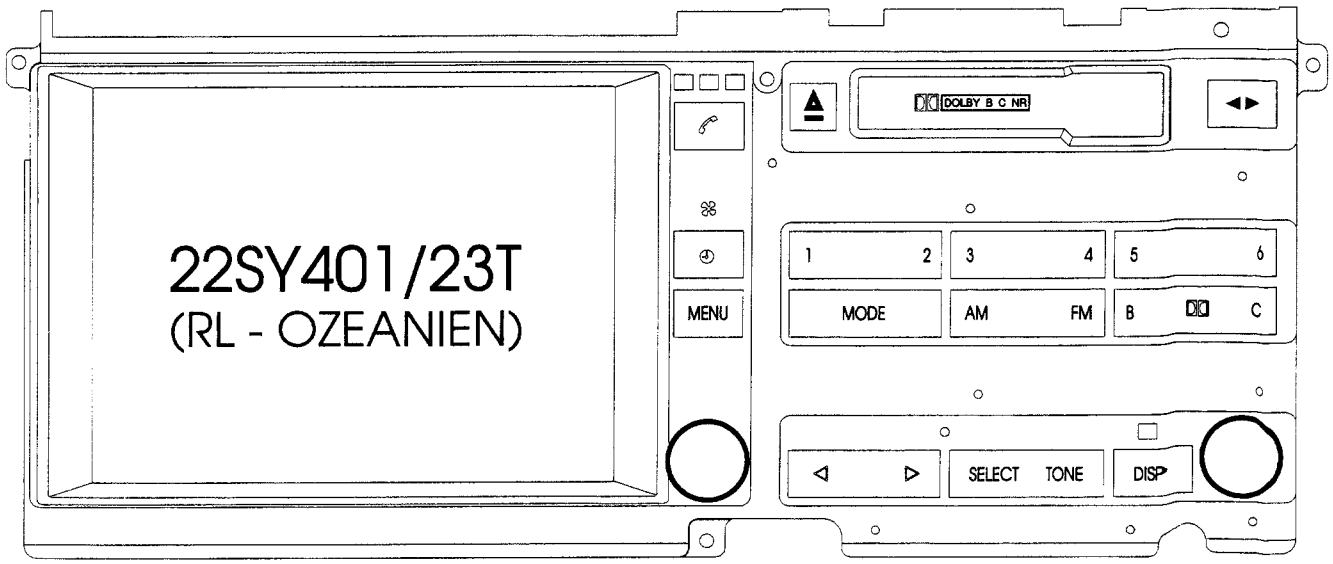

CONTROLS

✆	send/end telephone	
	green LED:	in use
	yellow LED:	telephone on
	red LED:	telephone is out of transmitter/receiver area
	red LED blinking:	telephone is not registered, only emergency calls possible
🕘	clock on/off, also when monitor is off	
	2 sec:	auxiliary heating/auxiliary fan on/off
	red fan symbol on:	heating/fan is programmed
	red fan symbol blinking:	heating/fan is active
MENU	(back) to system main menu	
MONITOR BUTTON	turn:	selection of function
	push:	activation of selected function
DISP	permanent display of selected audio source and clock	
VOLUME BUTTON	push:	radio/cassette/CDC on/off (red LED indicates on)
	turn:	volume control
SELECT	switch search function	
	radio mode:	manual — automatic with search level 2 — scan
	cassette mode:	ffw/frw — scan — MSS
	CD mode:	ffw/frw playback — next/previous track — scan — random play
TONE	select audio settings:	fader — balance — bass — treble
	the settings can be changed with ◄ ►	
	2 sec:	reset audio settings
◄ ►	search up/down with default search function or search function selected	
	default radio mode:	automatic search with low sensitivity
		automatic search with high sensitivity when push twice
	default cassette mode:	MSS
		ffw/frw when push twice
	default CD mode:	next/previous track
1-6	radio mode:	select stored stations of respectiv band
	2 sec:	store actual station
	CD mode:	select disc
FM	select FM1 — FM2 — FMA, 2 sec: store 6 strongest stations in FMA	
AM	select SW — LW — MW	
RDS	RDS on/off, 2 sec: REG on/off	
TP (TRAFFIC)	Traffic program on/off	
	on: only stations with traffic information are heard, interrupt cassette or CD during TA	
DD (B DD C)	select DOLBY B — DOLBY C — DOLBY OFF	
MODE	select CASSETTE — CD — RADIO	
◄►	select NOR (TAPE 1) — REV (TAPE 2)	
⏏	eject cassette	

Connector pos.1006 of 22SY401 (Controlmodul)

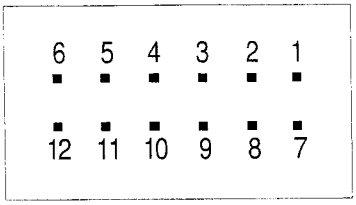

1:	EXT. ILL		7:	PERM.+	(from Battery)
2:	GND		8:	GND	
3:	NFCLWL +	(to Radiomodul)	9:	NFCLWLR -	(to Radiomodul)
4:	NFCLWL -	(to Radiomodul)	10:	NFCLWLR +	(to Radiomodul)
5:	NC		11:	IGN. KEY	
6:	I-BUS		12:	IIIUM. CONTROL	(to Monitor)

Connector NEC-Monitor

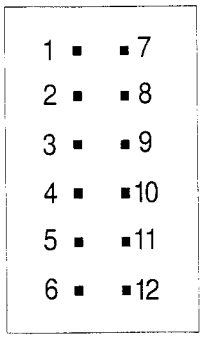

1:	VIDEO RED	(from Videomodul)
2:	VIDEO RED GND	(from Videomodul)
3:	VIDEO GREEN	(from Videomodul)
4:	VIDEO GREEN GND	(from Videomodul)
5:	VIDEO BLUE	(from Videomodul)
6:	VIDEO BLUE GND	(from Videomodul)
7:	VIDEOMODUL GND	(from Videomodul)
8:	PERM.+	(from Battery)
9 - 11:	NC	
12:	IIIUM.CONTROL	(from Controlmodul)

Adaptercable

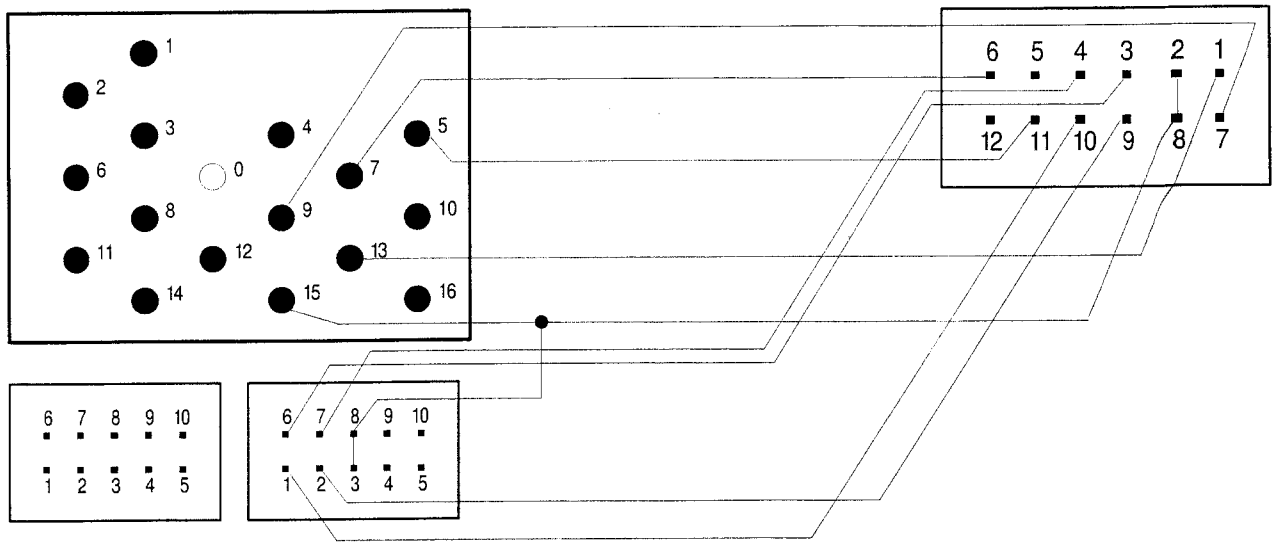

DEFAULT SETTINGS (Delivery status)

Volume:	100 mV (FM, ΔF 0 22,5 KHz, fmod = 1 KHz)
Tone:	All tone controls in center position
Radio mode:	FM1, RDS on, REG off, TP off, SCAN off
Cassette mode:	Nor direction (TAPE 1), Dolby off, MSS off
Service mode:	GAL = 2, SEEK = 1, TP-V = 0

SERVICE MODE

Enter: Switch radiomodul on and press TP within 8 s for about 8 s, set will automatically switch to radio mode.

Leave: Switch radiomodul off.

With the < and > keys you can scroll the different parameters:

MONITOR SHOWS	DESCRIPTION	EXAMPLE
Serial number	Serial number	R1003117
Software Version	Software version	05-94 64
GAL	GALA (SDVC)	2

With preset buttons 1...4 you can select the desired GALA volume

FREQUENCY NAME	Frequency PS	FM 89,3 HR3
F XX Q XX PI	Field strength Quality PI	F 15 Q 15 D363

Fieldstrength-range 0...15 (corresponds to 0...60 dBV on FM and AM),
quality-range 0...15 (RDS always switched on).
With preset buttons 1 and 2 manual search is possible, with 3 and 4 automatic search.
You can also select the different wave bands with AM and FM keys.

DSP	DSP installed/not installed	1
Seek Level	Search levels	1

With preset buttons 1 and 2 you can select search level 1 (high sensitivity) or 2 (less sensitivity).

TP-Volume	TA volume	+1

With preset buttons 1 and 2 you can adjust the volume for traffic announcements.
The selected volume is audible.

CHECKS

Check with U_{SUPPLY} = 13,2 V / Radiomodul 22DC785/23B connected

Voltage check

Ign.key (R) on	MP 9200:	4,5 - 5,1 V (DC)
	MP 9207:	8,1 - 8,9 V (DC)
	MP 9208:	11,5 - 13,0 V (DC)
	MP 9209:	0,6 - 5,1 V (DC)
	MP 9210:	4,9 - 5,1 V (DC)
	MP 9211:	12,0 - 13,2 V (DC)
	MP 9213:	4,0 - 13,0 V (DC)
	MP 9215:	11,0 - 13,0 V (DC)
	MP 9309:	1,9 - 2,8 V (DC)
	MP 9317:	2,8 - 3,5 V (DC)
	MP 9324:	4,5 - 5,1 V (DC)
	MP 9327:	10,0 - 13,0 V (DC)
	MP 9328:	-0,1 - 0,5 V (DC)

High voltage check

Ign. key off, U_{SUPPLY} = 25,0 V	MP 9208:	-0,1 - 1,0 V (DC)
	MP 9213:	-0,1 - 1,0 V (DC)
	MP 9215:	20,0 - 25,0 V (DC)

Dolby level check

Dolby test cassette, Dolby off	MP 9400:	290 - 310 mV_{eff} (adjust 3533 if deviates)
	MP 9402:	290 - 310 mV_{eff} (adjust 3534 if deviates)

Check measuring points

MP 9100: RXD
MP 9101: SCL
MP 9102: SDA
MP 9103: RADIO LED
MP 9104: TEL LED GRUEN
MP 9105: UHR LED
MP 9106: TEL LED GELB
MP 9107: TEL LED ROT
MP 9108: PWM LED
MP 9109: 5V
MP 9110: 5V
MP 9111: TXD
MP 9112: GND
MP 9113: ENABLE
MP 9114: CLOCK
MP 9115: DATA
MP 9201: KEY UHR
MP 9202: KEY TEL
MP 9203: KEY EJECT
MP 9204: 58G
MP 9206: KEY VOLUME
MP 9300: P0-1 (KEY MATRIX)
MP 9301: P0-2 (KEY MATRIX)
MP 9302: P0-3 (KEY MATRIX)
MP 9303: P2-5 (KEY MATRIX)
MP 9304: P2-4 (KEY MATRIX)
MP 9305: P2-3 (KEY MATRIX)
MP 9306: P2-2 (KEY MATRIX)
MP 9307: P2-1 (KEY MATRIX)
MP 9308: P2-0 (KEY MATRIX)
MP 9310: FOTOSENSOR
MP 9311: HANDDIMMER
MP 9312: VOLUME LEFT
MP 9313: VOLUME RIGHT
MP 9314: MONITOR LEFT
MP 9315: MONITOR RIGHt
MP 9316: P0-O (KEY MATRIX)
MP 9323: SWITCH (POWERCASS)
MP 9500: DOLBY OFF / DOLBY B / DOLBY C
MP 9502: MSS
MP 9504: ME/FE
MP 9505: TRACK
MP 9506: BIAS
MP 9507: NF RR
MP 9508: NF RN
MP 9509: NF LR
MP 9510: NF LN

PWB FRONT LEFT HAND VERSION

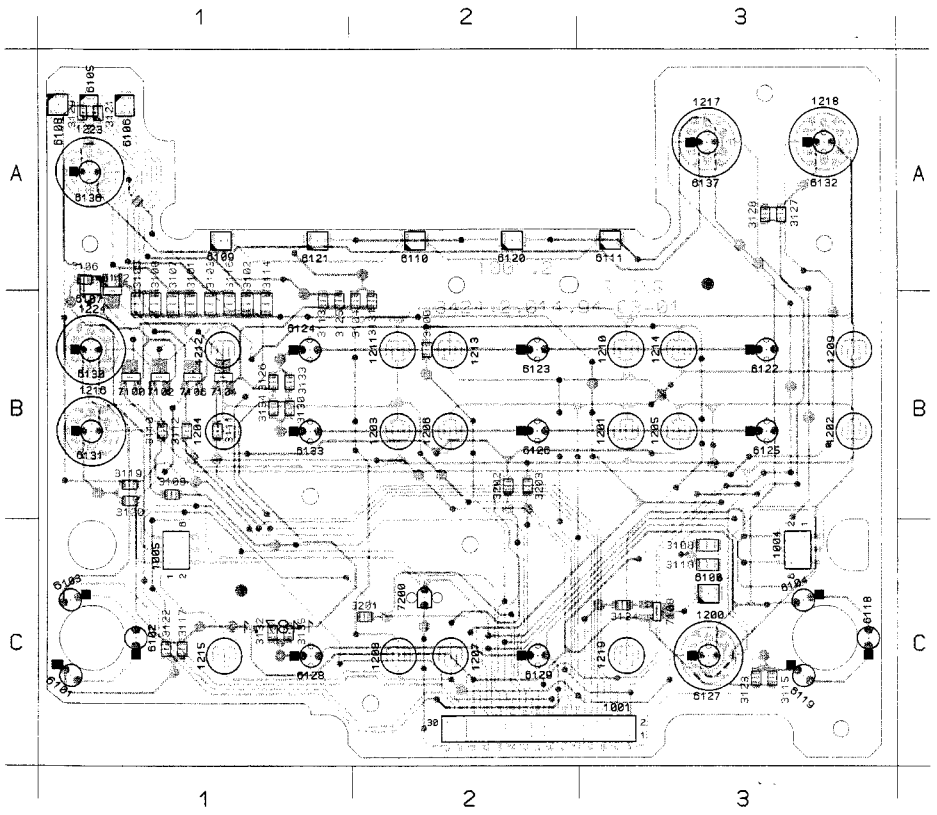

1001 C 2	3122 C 1	6136 A 3
1004 C 1	3123 C 3	6137 A 3
1005 C 3	3124 C 1	7100 B 3
1200 C 1	3125 A 1	7102 B 3
1201 B 1	3126 B 1	7104 B 3
1202 B 1	3127 A 1	7106 B 3
1203 B 2	3128 A 1	7108 C 1
1204 B 3	3129 A 3	7200 C 2
1205 B 1	3130 B 1	
1206 B 2	3131 A 1	
1207 C 2	3132 C 1	
1208 C 3	3133 B 1	
1209 B 3	3134 B 1	
1210 B 2	3135 C 1	
1211 B 1	3200 B 1	
1212 B 1	3201 C 3	
1213 B 1	3202 B 2	
1214 B 2	3203 B 2	
1215 C 2	6100 C 1	
1216 B 3	6101 C 1	
1217 A 3	6102 C 1	
1218 A 1	6103 C 1	
1219 C 1	6104 C 3	
1223 A 3	6105 A 3	
1224 B 3	6106 A 3	
3100 B 3	6107 A 3	
3101 A 3	6108 A 3	
3102 A 3	6109 A 1	
3103 A 3	6110 A 2	
3104 A 1	6111 A 3	
3105 B 3	6112 B 3	
3106 B 3	6118 C 3	
3107 A 3	6119 C 3	
3108 C 1	6120 A 2	
3109 B 3	6121 A 1	
3110 B 3	6122 B 3	
3111 B 3	6123 B 2	
3112 B 3	6124 B 1	
3113 A 1	6125 B 3	
3114 A 3	6126 B 2	
3115 C 3	6127 C 1	
3116 A 3	6128 C 2	
3117 C 1	6129 C 3	
3118 C 1	6130 B 3	
3119 B 3	6131 B 3	
3120 B 3	6132 A 1	
3121 A 3	6133 B 1	

PWB FRONT RIGHT HAND VERSION

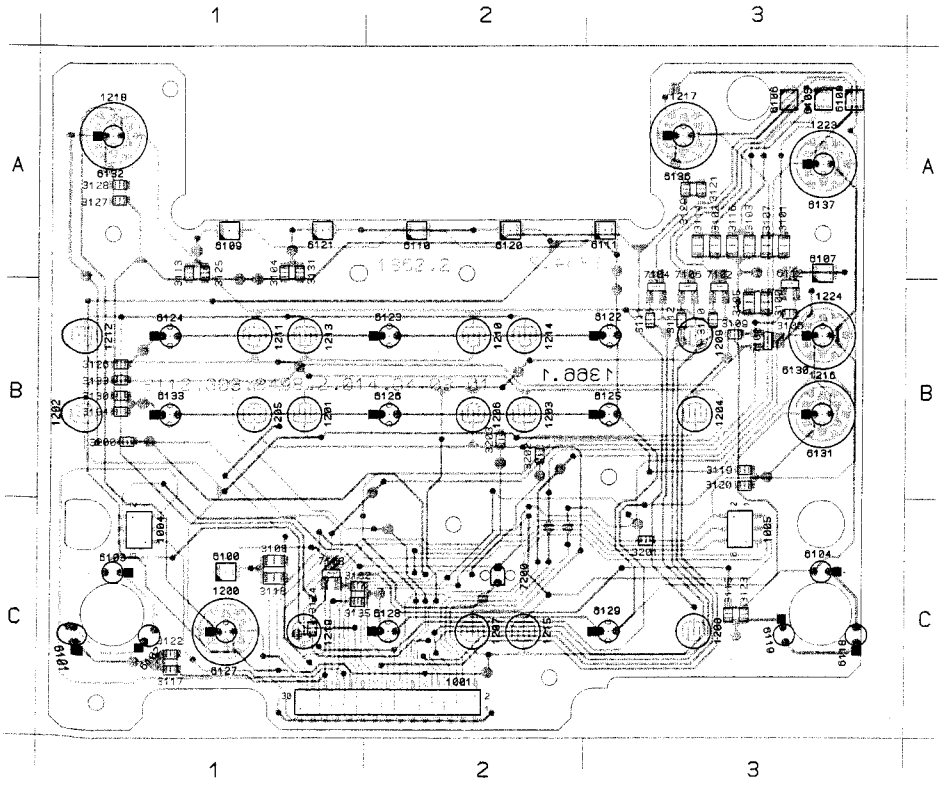

1001 C 2	3120 B 3	6130 B 3
1004 C 1	3121 A 3	6131 B 3
1005 C 3	3122 C 1	6132 A 1
1200 C 1	3123 C 3	6133 B 1
1201 B 1	3124 C 1	6136 A 3
1202 B 1	3125 A 1	6137 A 3
1203 B 2	3126 B 1	7100 B 3
1204 B 3	3127 A 1	7102 B 3
1205 B 1	3128 A 1	7104 B 3
1206 B 2	3129 A 3	7106 B 3
1207 C 2	3130 B 1	7108 C 1
1208 C 3	3131 A 1	7200 C 2
1209 B 3	3132 C 1	
1210 B 2	3133 B 1	
1211 B 1	3134 B 1	
1212 B 1	3135 C 1	
1213 B 1	3200 B 1	
1214 B 2	3201 C 3	
1215 C 2	3202 B 2	
1216 B 3	3203 B 2	
1217 A 3	6100 C 1	
1218 A 1	6101 C 1	
1219 C 1	6102 C 1	
1223 A 3	6103 C 1	
1224 B 3	6104 C 3	
3100 B 3	6105 A 3	
3101 A 3	6106 A 3	
3102 A 3	6107 A 3	
3103 A 3	6108 A 3	
3104 A 1	6109 A 1	
3105 B 3	6110 A 2	
3106 B 3	6111 A 3	
3107 A 3	6112 B 3	
3108 C 1	6118 C 3	
3109 B 3	6119 C 3	
3110 B 3	6120 A 2	
3111 B 3	6121 A 1	
3112 B 3	6122 B 3	
3113 A 1	6123 B 2	
3114 A 3	6124 B 1	
3115 C 3	6125 B 3	
3116 A 3	6126 B 2	
3117 C 1	6127 C 1	
3118 C 1	6128 C 2	
3119 B 3	6129 C 3	

PCS 79 871

FRONT CIRCUIT

1001	G11	1001	F11	1001	A 1	1204	D 8	1216	D 8	3106	A 3	3118	A 7	3130	H 4	6102	G 1	6119	H 2	6131	G 6
1001	F 1	1001	B11	1001	F 1	1205	D 9	1217	E 2	3107	A 5	3119	H 5	3131	H 3	6103	G 1	6120	G 3	6132	G 7
1001	E 1	1001	B 1	1001	A 1	1206	D10	1218	C 8	3108	A 7	3120	H 6	3132	H 5	6104	G 2	6121	G 3	6133	H 4
1001	E 1	1001	D11	1001	A11	1207	D10	1219	C 8	3109	B 3	3121	H 6	3133	H 4	6105	B 6	6122	G 4	6136	G 6
1001	C 1	1001	D11	1001	D 1	1208	C10	1223	E 2	3110	C 3	3122	H 1	3134	H 4	6106	B 4	6123	G 4	6137	G 6
1001	D 1	1001	C11	1001	G 1	1209	C10	1224	E 2	3111	C 3	3123	H 2	3135	H 5	6107	B 3	6124	H 4	7100	B 3
1001	D 1	1001	C11	1004	G10	1210	C 9	3100	A 4	3112	D 3	3124	D 3	3200	C11	6108	B 5	6125	G 4	7102	C 5
1001	C 1	1001	G11	1005	A10	1211	C 8	3101	A 5	3113	H 3	3125	H 2	3201	C11	6109	H 3	6126	G 4	7104	C 5
1001	E11	1001	H11	1200	D10	1212	C 8	3102	A 4	3114	A 4	3126	H 4	3202	D11	6110	G 3	6127	G 7	7106	D 6
1001	E11	1001	A11	1201	D10	1213	C 9	3103	A 6	3115	H 2	3127	H 7	3203	D11	6111	G 3	6128	G 5	7108	D 7
1001	F11	1001	B11	1202	D 9	1214	C10	3104	H 3	3116	A 6	3128	H 7	6100	B 7	6112	A 3	6129	G 5	7200	D 1
1001	F11	1001	F 1	1203	D 8	1215	C10	3105	A 3	3117	H 1	3129	H 6	6101	H 1	6118	G 2	6130	G 6		

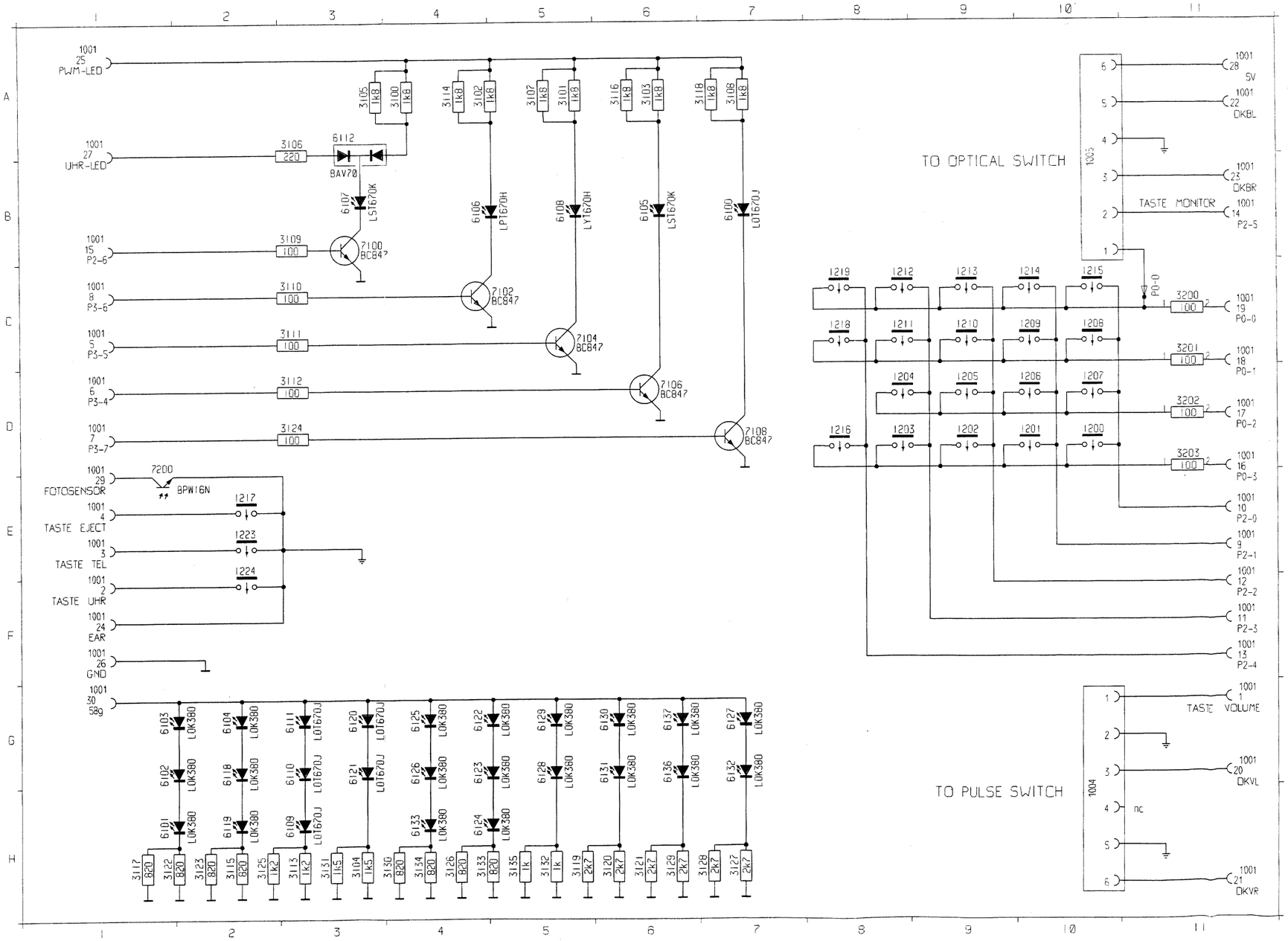

MAIN PWB - BOTTOM SIDE VIEW

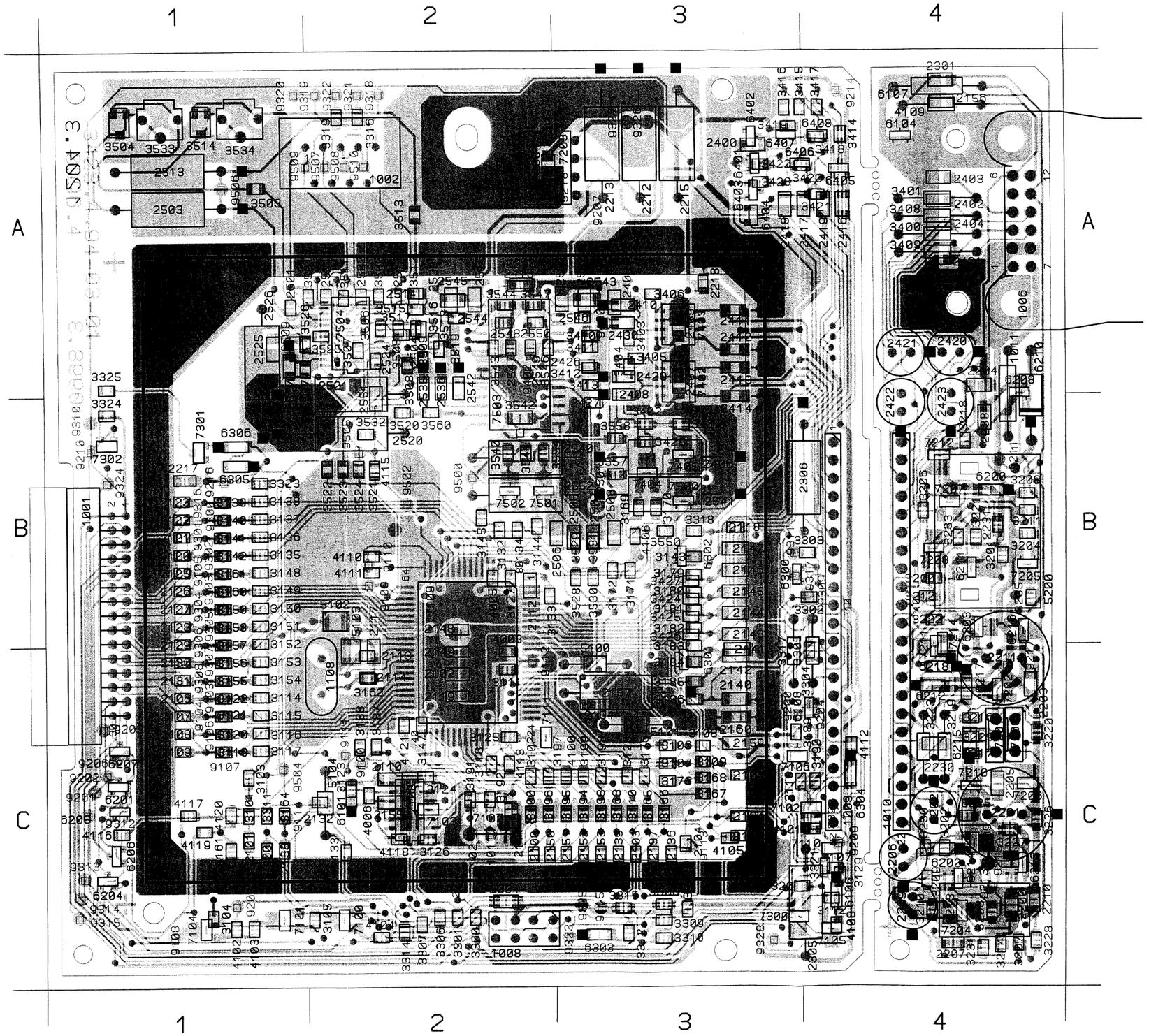

1001 B 1	2153 C 3	2427 B 3	3118 C 2	3184 C 3
1002 A 2	2154 C 3	2429 A 3	3119 C 1	3185 C 3
1006 A 4	2155 C 2	2430 A 3	3120 C 1	3186 C 3
1008 C 2	2156 A 4	2501 A 1	3121 C 1	3187 C 2
1009 B 4	2157 C 3	2502 A 2	3122 C 1	3188 C 2
1010 B 4	2159 C 3	2503 A 1	3123 C 2	3189 C 3
1011 B 4	2160 C 3	2504 A 2	3124 C 2	3190 C 4
1108 C 2	2161 C 1	2505 B 3	3125 C 2	3191 C 2
1999 B 1	2200 C 4	2506 B 2	3126 C 2	3192 C 2
2100 C 2	2201 C 4	2507 B 3	3127 B 2	3193 C 3
2101 C 1	2202 C 4	2508 B 3	3128 C 3	3194 C 3
2102 C 2	2203 C 4	2509 A 1	3129 C 4	3195 C 3
2103 C 3	2204 A 4	2510 A 3	3132 B 2	3196 C 2
2104 C 3	2205 C 4	2511 A 2	3133 B 2	3197 C 2
2105 C 3	2206 C 4	2512 A 2	3134 B 2	3198 C 3
2106 C 1	2207 C 4	2513 A 1	3135 B 1	3199 C 3
2107 C 1	2208 A 2	2514 A 2	3136 B 1	3200 B 4
2108 C 1	2209 C 4	2515 A 2	3137 B 1	3201 B 4
2109 C 1	2210 C 4	2520 B 2	3138 B 1	3202 C 4
2110 C 2	2211 C 4	2521 A 2	3139 B 1	3203 C 4
2111 C 2	2212 A 3	2524 A 2	3140 B 1	3204 B 4
2112 B 2	2213 A 3	2525 A 1	3141 B 1	3205 B 4
2113 C 2	2215 A 3	2526 A 1	3142 B 1	3206 B 4
2114 C 2	2216 A 2	2527 A 1	3143 B 3	3207 C 4
2117 C 2	2217 B 1	2535 A 2	3144 B 2	3208 B 4
2118 B 3	2218 A 3	2536 A 2	3145 B 2	3209 C 4
2119 C 2	2230 C 4	2537 A 3	3147 C 2	3210 C 4
2120 B 1	2231 B 4	2538 A 2	3148 B 1	3211 B 4
2121 B 1	2233 B 4	2540 B 2	3149 B 1	3212 B 4
2122 B 1	2300 C 1	2541 B 3	3150 B 1	3214 C 4
2123 B 1	2301 A 4	2542 A 2	3151 B 1	3216 C 4
2125 B 1	2304 C 2	2543 A 3	3152 B 1	3217 C 4
2126 B 1	2305 C 4	2544 A 2	3153 C 1	3218 B 4
2127 B 1	2306 B 3	2545 A 2	3154 C 1	3219 C 4
2128 B 1	2400 A 3	2546 A 3	3155 C 1	3220 C 4
2129 B 1	2401 A 4	2547 A 2	3156 C 1	3221 B 4
2130 C 1	2402 A 4	2548 A 2	3157 B 1	3222 B 4
2131 C 1	2403 A 4	2549 A 2	3158 B 1	3223 C 4
2132 C 2	2404 A 4	2550 A 2	3159 B 1	3225 C 4
2133 C 2	2405 A 3	2551 B 2	3160 B 1	3226 C 4
2134 C 3	2406 B 3	2552 B 2	3161 B 1	3227 C 4
2135 C 3	2407 A 3	3100 C 2	3162 C 2	3228 C 4
2136 C 3	2408 A 3	3101 C 1	3163 C 3	3229 C 4
2137 C 3	2409 A 3	3102 C 2	3164 C 1	3230 C 4
2138 C 1	2410 A 3	3103 C 1	3165 C 3	3231 C 4
2139 C 3	2411 A 3	3104 C 1	3166 C 3	3233 B 4
2140 C 3	2412 A 3	3105 C 2	3167 C 3	3300 C 2
2141 C 3	2413 A 3	3106 C 3	3168 C 3	3301 C 2
2142 C 3	2414 B 3	3107 C 3	3169 B 3	3302 B 4
2143 B 3	2415 A 2	3108 C 3	3170 B 3	3303 B 4
2144 B 3	2416 A 4	3109 C 3	3171 B 3	3304 C 4
2145 B 3	2417 A 4	3110 C 3	3172 B 3	3305 C 4
2146 B 3	2418 A 3	3111 C 2	3173 C 3	3306 C 2
2147 B 3	2419 A 4	3112 C 4	3176 C 3	3307 C 2
2148 B 2	2420 A 4	3113 C 3	3179 B 3	3308 C 3
2149 C 2	2421 A 4	3114 C 1	3180 B 3	3309 C 3
2150 C 2	2422 B 4	3115 C 1	3181 B 3	3310 C 3
2151 C 3	2423 B 4	3116 C 1	3182 B 3	3311 C 1
2152 C 3	2426 A 3	3117 C 1	3183 C 3	3312 C 3

PCS 79 873

MAIN PWB - TOP SIDE VIEW

3313 C 3	3519 A 2	6104 A 4	7210 C 4	9309 B 4
3314 C 2	3520 B 2	6106 C 4	7211 C 4	9310 B 1
3315 C 3	3521 B 2	6107 A 4	7212 B 4	9311 B 3
3316 A 2	3522 B 2	6108 C 4	7213 C 4	9312 C 1
3317 C 3	3523 B 2	6200 B 4	7214 B 4	9313 C 1
3318 B 3	3524 B 2	6201 C 1	7300 C 3	9314 C 1
3319 A 2	3525 A 2	6202 C 4	7301 B 1	9315 C 1
3320 C 3	3526 A 1	6203 B 4	7302 B 1	9316 B 1
3321 C 4	3527 A 1	6204 C 1	7402 A 3	9317 B 3
3322 C 4	3528 B 3	6205 C 1	7403 A 3	9318 A 2
3323 B 1	3529 B 3	6206 C 1	7404 B 3	9319 A 2
3324 B 1	3530 B 3	6207 C 1	7405 B 3	9320 A 1
3325 A 1	3531 B 3	6208 A 4	7500 B 3	9321 A 2
3400 A 4	3532 B 2	6210 B 4	7501 B 2	9322 A 2
3401 A 4	3533 A 1	6211 B 4	7502 B 2	9323 C 3
3402 B 3	3534 A 1	6212 C 4	7503 A 2	9324 B 1
3403 A 3	3540 B 2	6213 C 4	7504 A 2	9325 C 3
3404 A 3	3541 B 2	6214 C 4	9100 C 2	9326 A 3
3405 A 3	3542 B 2	6215 C 4	9101 C 2	9327 A 3
3406 A 3	3543 A 2	6216 B 4	9102 C 2	9328 C 3
3407 B 3	3544 A 2	6217 C 4	9103 C 1	9400 A 3
3408 A 4	3546 A 2	6218 C 4	9104 C 1	9402 A 2
3409 A 4	3547 A 2	6300 B 3	9105 B 1	9500 B 2
3410 A 3	3550 B 3	6301 C 3	9106 C 1	9501 B 3
3411 A 3	3554 B 2	6302 B 3	9107 C 1	9502 B 2
3412 A 3	3557 B 3	6303 C 3	9108 C 1	9504 C 1
3413 A 3	3558 B 3	6304 C 4	9109 B 2	9505 B 2
3414 A 4	3560 B 2	6305 B 1	9110 B 2	9506 A 1
3415 A 3	4003 C 2	6306 B 1	9111 C 2	9507 A 2
3416 A 3	4005 B 2	6401 A 3	9112 C 2	9508 A 2
3417 A 4	4006 C 2	6402 A 3	9113 C 3	9509 A 1
3418 A 4	4100 C 3	6403 A 3	9114 C 1	9510 A 2
3419 A 3	4101 C 4	6404 A 3	9115 C 3	
3420 A 3	4102 C 1	6405 A 4	9200 C 3	
3421 A 4	4103 C 1	6406 A 3	9201 C 1	
3422 A 3	4104 C 2	6407 A 3	9202 C 1	
3423 A 3	4105 C 3	6408 A 4	9203 C 1	
3424 B 3	4106 B 3	7100 C 2	9204 C 4	
3425 B 3	4107 C 4	7101 C 1	9206 C 1	
3426 B 3	4108 C 4	7102 C 4	9207 A 3	
3427 B 3	4109 A 4	7103 C 2	9208 C 1	
3428 B 3	4110 B 2	7104 C 1	9209 C 4	
3501 A 2	4111 B 2	7105 C 4	9210 B 1	
3502 A 2	4112 C 4	7106 C 3	9211 B 4	
3503 A 1	4113 C 2	7107 C 2	9213 C 4	
3504 A 1	4115 B 2	7108 C 2	9214 A 4	
3505 A 2	4116 C 1	7109 C 2	9215 C 4	
3506 A 2	4117 C 1	7110 C 4	9216 B 1	
3507 A 2	4118 C 2	7111 C 2	9217 C 4	
3508 A 2	4119 C 1	7200 C 4	9218 A 2	
3509 A 2	4120 C 1	7201 C 4	9300 B 1	
3511 A 2	4121 C 2	7202 C 4	9301 B 1	
3512 A 2	5100 C 3	7203 A 2	9302 B 1	
3513 A 2	5101 C 3	7204 C 4	9303 B 1	
3514 A 1	5102 B 2	7205 B 4	9304 B 1	
3515 A 2	5103 C 2	7206 C 4	9305 B 1	
3516 A 2	5104 C 2	7207 B 4	9306 B 1	
3517 A 2	5200 B 4	7208 B 4	9307 C 1	
3518 A 2	6101 C 2	7209 C 4	9308 C 1	

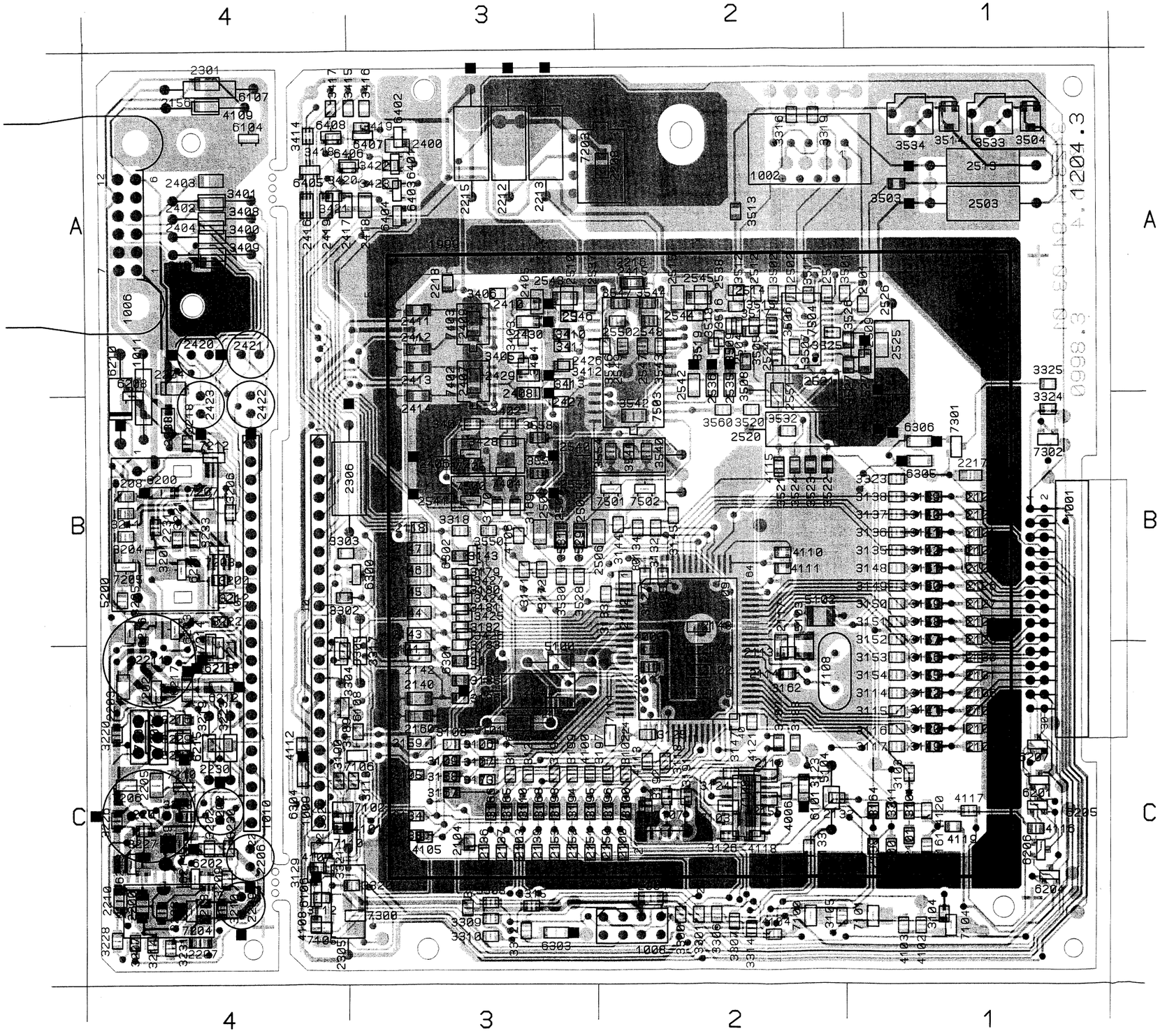

MAIN PWB - CONTROL CIRCUIT

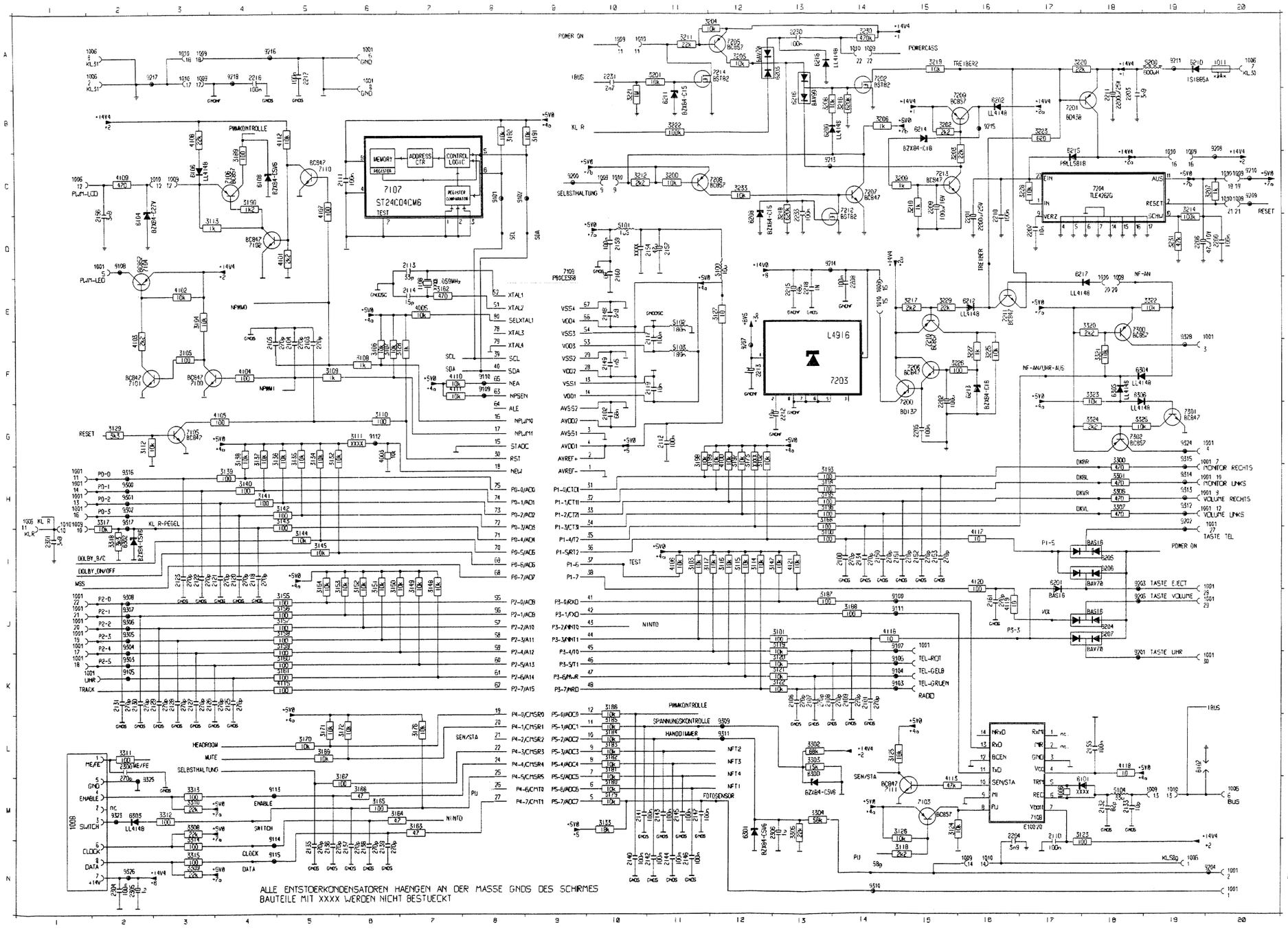

1001	N20	2150	I14	3182	L10	6205	I18
1001	N20	2151	I15	3183	L10	6206	I18
1001	E19	2152	I15	3184	L10	6207	J18
1001	G19	2153	I15	3185	L10	6208	D12
1001	D2	2154	D10	3186	K10	6210	A19
1001	A6	2155	L18	3187	J13	6211	B11
1001	G19	2156	C2	3188	J14	6212	E16
1001	A6	2157	D11	3189	C4	6213	F16
1001	H19	2159	D10	3190	C4	6214	B15
1001	H19	2160	D10	3191	B3	6215	D17
1001	H1	2161	J16	3192	B8	6216	B13
1001	H19	2200	D20	3193	H13	6217	D17
1001	H1	2201	D16	3194	H13	6218	A13
1001	H1	2202	F15	3195	H13	6300	L13
1001	K2	2203	B18	3196	H13	6301	M12
1001	H1	2204	M16	3197	G12	6302	I 8
1001	J1	2205	G15	3198	G11	6303	M 2
1001	K1	2206	D19	3199	G12	6304	F18
1001	J1	2207	D17	3200	C11	6305	F18
1001	J1	2208	E14	3201	A11	6306	F18
1001	J1	2209	C15	3202	B15	7100	F 3
1001	J1	2210	D16	3203	C15	7101	F 2
1001	J15	2211	B18	3204	A12	7102	D 4
1001	H19	2212	G13	3205	A12	7103	M15
1001	I19	2213	F12	3206	B14	7104	D 2
1001	K19	2215	E13	3207	C20	7105	G 3
1001	J19	2216	A 4	3208	B13	7106	C 4
1006	N19	2217	A 5	3209	C15	7107	C 5
1006	A 2	2218	E15	3210	C15	7109	M17
1006	M20	2230	A13	3211	A11	7109	D 3
1006	A20	2231	A10	3212	C10	7110	D 5
1006	A 2	2233	D13	3214	D19	7111	M15
1006	H 1	2300	L 2	3216	B14	7200	G15
1006	C 1	2301	I 1	3217	E15	7201	B17
1006	E 1	2304	N 2	3218	C13	7202	A14
1009	C10	2305	N 2	3219	A15	7203	F14
1009	H 1	2306	M13	3220	A17	7204	D19
1009	A10	3100	I13	3221	B10	7205	A12
1009	C 3	3101	J13	3222	B11	7206	F15
1009	M19	3102	G12	3223	B17	7207	C14
1009	N16	3103	I11	3225	F16	7208	B12
1009	E14	3104	E 3	3226	F15	7209	B15
1009	C19	3105	F 3	3227	F16	7210	E15
1009	A 3	3106	F 6	3228	D17	7211	E16
1009	A 3	3107	F 6	3229	E15	7212	C14
1009	C20	3108	F 5	3230	A14	7213	C15
1009	E19	3109	F 5	3231	D19	7214	A12
1009	C20	3110	G 6	3233	C12	7300	E18
1009	A14	3111	G 6	3300	G18	7301	G19
1010	C10	3112	G 2	3301	H18	7302	G18
1010	H 1	3113	D 4	3302	L13	9100	J15
1010	A11	3114	I12	3303	L13	9101	C 8
1010	C 2	3115	I12	3304	M13	9102	G 5
1010	M19	3116	I12	3305	M13	9103	K15
1010	N16	3117	I11	3306	H18	9104	K15
1010	E14	3118	N15	3307	H18	9105	K 2
1010	C19	3119	J13	3308	M 3	9106	K15
1010	A 3	3120	K13	3309	N 3	9107	J15
1010	A 3	3121	K13	3310	M 3	9108	D 2
1010	C20	3122	K13	3311	L 2	9109	F 8
1010	E18	3123	M18	3312	M 3	9110	F 8
1010	C20	3124	M15	3313	M 3	9111	J15
1010	A14	3125	L14	3314	N 3	9112	G 5
1011	A20	3126	M15	3315	M 3	9113	K 5
1188	E 7	3127	E12	3317	H 2	9114	N 5
2100	I14	3128	F 7	3318	I 2	9115	N 5
2101	K14	3129	G 2	3320	E18	9200	C 9
2102	G10	3132	G 5	3321	F18	9201	K19
2103	F 5	3133	M10	3322	E19	9202	H19
2104	F 5	3134	G 5	3323	F18	9203	I19
2105	F 4	3135	G 5	3324	G18	9204	N20
2106	K13	3136	G 5	3325	G18	9206	J19
2107	K13	3137	G 4	4003	G 6	9207	E12
2108	K13	3138	G 4	4005	E 7	9208	B20
2109	K14	3139	H 4	4006	M17	9209	C20
2110	M17	3140	H 4	4100	G12	9210	C20
2111	C 6	3141	H 4	4101	D 5	9211	A13
2112	G11	3142	H 5	4102	E 3	9213	C14
2113	D 7	3143	H 5	4103	E 2	9214	D14
2114	E 7	3144	I 5	4104	F 4	9215	B16
2117	E11	3145	I 5	4105	G 4	9216	A 5
2118	I 4	3147	I13	4106	I11	9217	A 3
2119	F11	3148	I 7	4107	C 5	9218	A 4
2120	I 4	3149	I 7	4108	B 3	9300	H 2
2121	I 4	3150	I 6	4109	C 2	9301	H 2
2122	I 5	3151	I 6	4110	F 7	9302	H 2
2123	I 5	3152	I 6	4111	F 7	9303	K 2
2125	K 4	3153	I 6	4112	B 5	9304	J 2
2126	K 3	3154	I 5	4113	M15	9305	J 2
2127	K 3	3155	J 5	4115	K 5	9306	J 2
2128	K 3	3156	J 5	4116	J14	9307	J 2
2129	K 3	3157	J 5	4117	I16	9308	J 2
2130	K 2	3158	J 5	4119	L18	9309	L12
2131	K 2	3159	J 5	4119	J16	9310	N14
2132	M18	3160	K 5	4120	I16	9311	L12
2133	M18	3161	K 5	4121	I13	9312	H19
2134	I14	3162	E 7	5100	D12	9313	H19
2135	N 5	3163	M 7	5101	D10	9314	H19
2136	N 5	3164	M 6	5102	E11	9315	G19
2137	N 5	3165	M 6	5103	F11	9316	H 2
2138	N 6	3166	M 6	5104	M18	9317	H 2
2139	N 6	3167	M 6	5200	A19	9323	M 2
2140	N10	3168	H13	6101	M18	9324	G19
2141	M10	3169	L 5	6104	D 2	9325	M 3
2142	N11	3170	L 5	6106	C 3	9326	N 2
2143	M11	3171	L 5	6107	L19	9328	E19
2144	N11	3172	L 6	6108	C 4		
2145	M11	3173	G12	6200	B13		
2146	N11	3176	L 7	6201	I17		
2147	M11	3179	M10	6202	B16		
2148	E10	3180	M10	6203	A13		
2149	F10	3181	L10	6204	J18		

MAIN PWB - AF CIRCUIT

1002 C 1	1009 B18	2401 G19	2412 E18	2423 G19	2507 D 7	2524 G 2	2543 H 8	3401 E19	3412 F14	3423 A14	3506 D 6	3518 E 7	3529 G 7	3546 C12	6405 B17	7503 C 8	9509 D 1
1006 D20	1009 D18	2402 G19	2413 G18	2426 D15	2508 E 7	2525 H 3	2544 H 9	3402 E15	3413 G14	3424 C15	3507 D 6	3519 E 7	3530 G 7	3547 C13	6406 B16	7504 C 2	9510 C 1
1006 E20	1010 F18	2403 E19	2414 G18	2427 G14	2509 H 3	2526 H 4	2545 H11	3403 E14	3414 B16	3425 C15	3508 D 7	3520 B 2	3531 E 7	3550 B 7	6407 B15	9400 D13	
1006 G20	1010 B18	2404 D19	2415 E13	2429 F15	2510 E12	2527 G 5	2546 H11	3404 E14	3415 B15	3426 C14	3509 C 7	3521 B 3	3532 E 7	3554 A11	6408 A14	9402 F13	
1006 F20	1010 E18	2405 E14	2416 B17	2430 C15	2511 F 1	2535 D 7	2547 G13	3405 F16	3416 B15	3427 C13	3511 E 1	3522 B 4	3533 G 6	3557 B10	7402 F16	9500 B10	
1009 F18	1010 A18	2406 E15	2417 B17	2501 E 1	2512 E 1	2536 E 7	2548 G12	3406 E16	3417 A14	3428 E15	3512 E 1	3523 B 4	3534 G 6	3558 A10	7403 D16	9502 B 6	
1009 B18	1010 B18	2407 F17	2418 B17	2502 D 1	2513 H 6	2537 E12	2549 C12	3407 F15	3418 A14	3501 D 1	3513 F 6	3524 B 5	3540 A10	3560 A 2	7404 D14	9504 C 3	
1009 D18	1010 G18	2408 G15	2419 A17	2503 H 5	2514 E 6	2538 F12	2550 C13	3408 F19	3419 A15	3502 D 1	3514 G 6	3525 G 3	3541 B10	6401 C14	7405 F14	9505 C 3	
1009 A18	1010 B18	2409 C17	2420 D19	2504 D 6	2515 F12	2540 B 9	2551 B 2	3409 G19	3420 A16	3503 F 5	3515 E 6	3526 G 4	3542 H10	6402 C15	7500 B 9	9506 F 1	
1009 B18	1010 D18	2410 D15	2421 E19	2505 F 7	2520 B 2	2541 B10	2552 B11	3410 D14	3421 A17	3504 G 5	3516 E 6	3527 G 4	3543 G12	6403 C16	7501 A12	9507 E 1	
1009 G18	2400 A18	2411 D18	2422 F19	2506 G 7	2521 F 1	2542 H10	3400 D19	3411 D15	3422 A18	3505 D 6	3517 F 6	3528 F 7	3544 G13	6404 C17	7502 B11	9508 E 1	

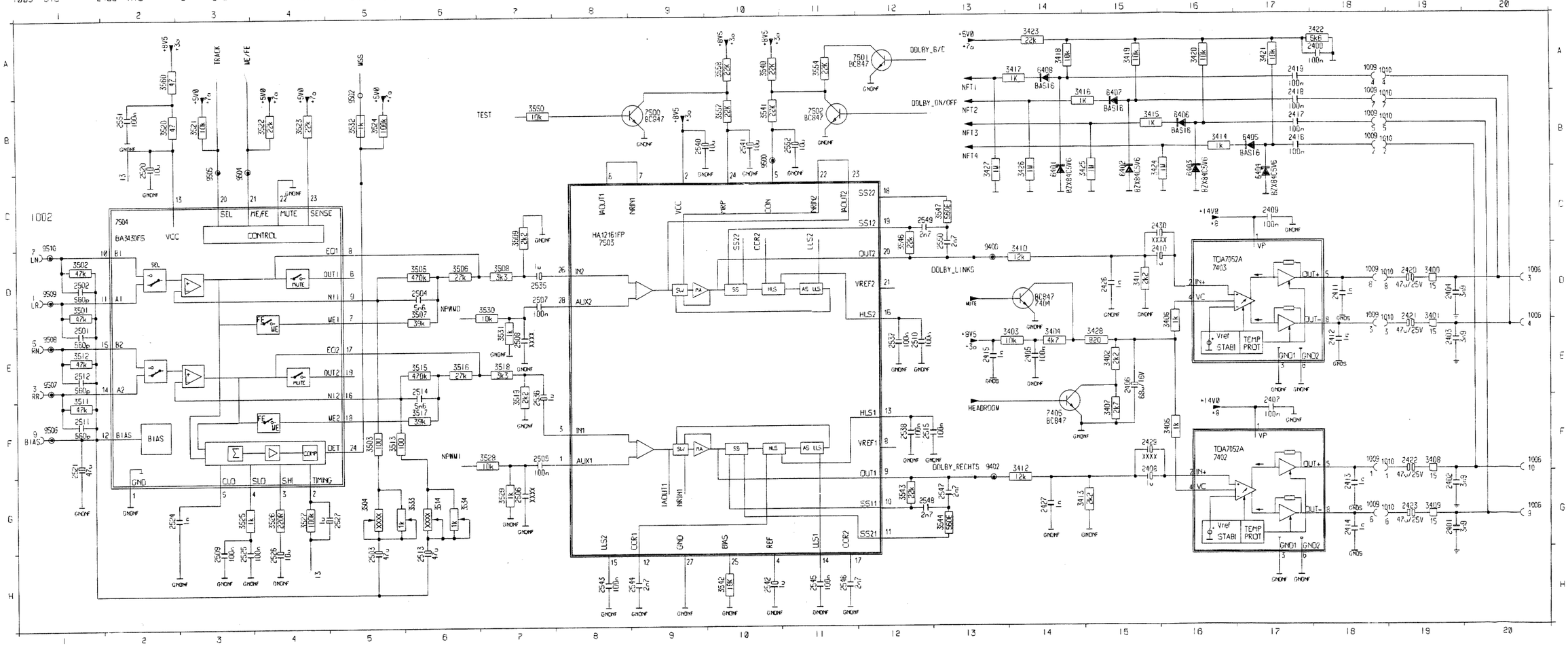

1001 - 1001	4822	214	52237	PWB MAIN ASSY
1001 - 1002	4822	701	13796	TAPE DECK ASSY SCA 4.4
1002 - 1	4822	459	50894	ORNAMENTAL PLATE /23L
1002 - 1	4822	459	50892	ORNAMENTAL PLATE /23E
1002 - 1	4822	459	50893	ORNAMENTAL PLATE /23F
1002 - 13	4822	410	63546	SWITCH MATE LEFT
1002 - 17	4822	492	42481	SPRING, FLAP
1002 - 23	4822	413	31829	KNOB VOLUME
1002 - 25	4822	413	31828	KNOB INCREMENT
1002 - 1001	4822	214	52238	PWB FRONT LEFT
1002 - 1002	4822	214	52239	PWB SWITCH LEFT
1002 - 1003	4822	214	52244	PWB OPT.SWITCH LEFT
1002 - 1004	4822	278	80294	SWITCH INCREMENT OPTICAL

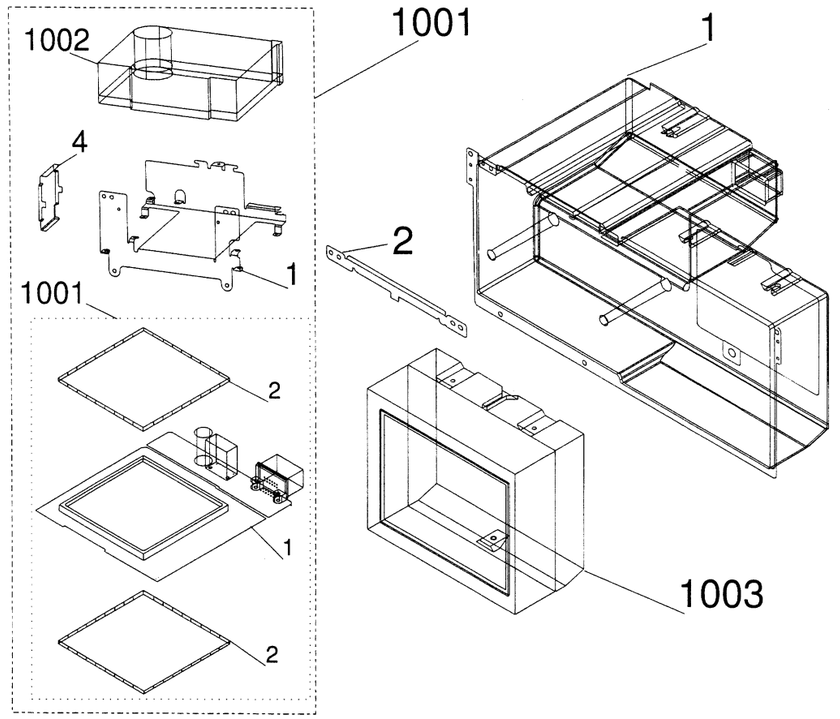

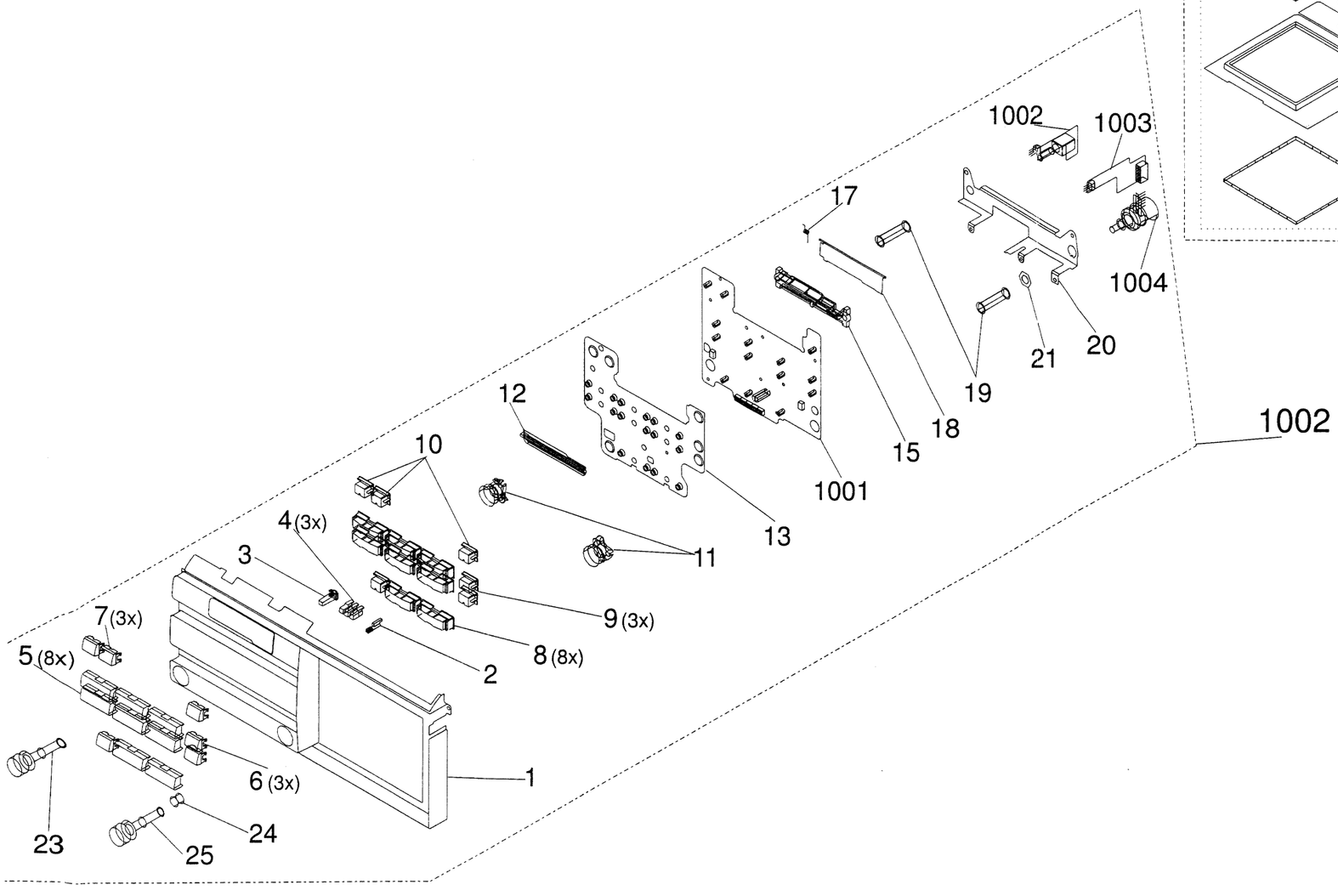

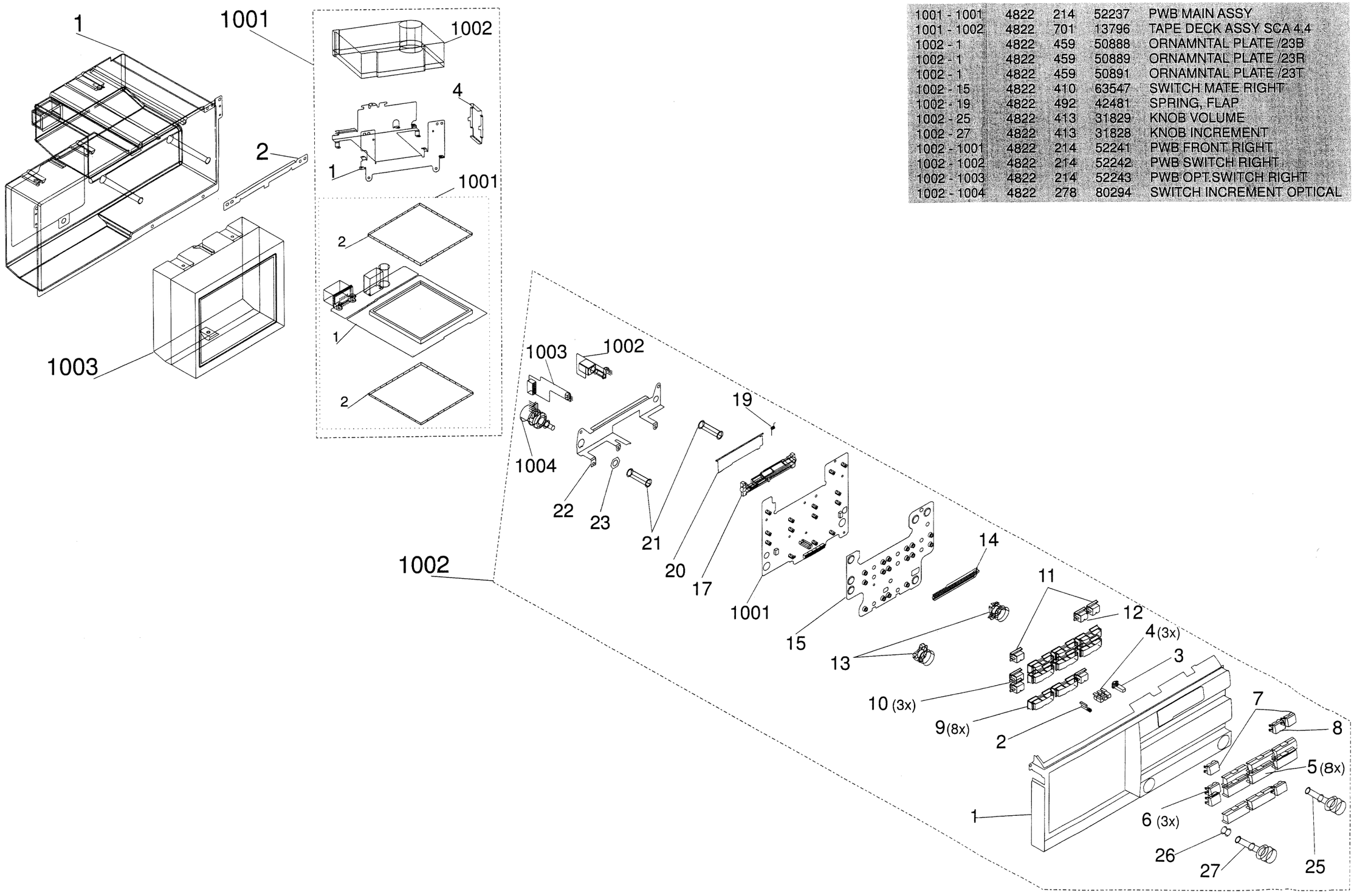

1001 - 1001	4822	214	52237	PWB MAIN ASSY
1001 - 1002	4822	701	13796	TAPE DECK ASSY SCA 4.4
1002 - 1	4822	459	50888	ORNAMNTAL PLATE /23B
1002 - 1	4822	459	50889	ORNAMNTAL PLATE /23R
1002 - 1	4822	459	50891	ORNAMNTAL PLATE /23T
1002 - 15	4822	410	63547	SWITCH MATE RIGHT
1002 - 19	4822	492	42481	SPRING, FLAP
1002 - 25	4822	413	31829	KNOB VOLUME
1002 - 27	4822	413	31828	KNOB INCREMENT
1002 - 1001	4822	214	52241	PWB FRONT RIGHT
1002 - 1002	4822	214	52242	PWB SWITCH RIGHT
1002 - 1003	4822	214	52243	PWB OPT.SWITCH RIGHT
1002 - 1004	4822	278	80294	SWITCH INCREMENT OPTICAL

LECTRICAL PARTS MAIN PWB

IISCELLANEOUS

011	4822 252 51181	FUSE	FUSE	3A(T)	
108	4822 242 81646	CRYSTAL	11.059	MHZ	

CAPACITORS

2100	4822 122 33216	CAP.CHIP	270PF	5%NP0	50V
2101	4822 122 33216	CAP.CHIP	270PF	5%NP0	50V
2102	4822 122 32891	CAP.CERAMIC	68NF	10%X7R	63V
2103	4822 122 33216	CAP.CHIP	270PF	5%NP0	50V
2104	4822 122 33216	CAP.CHIP	270PF	5%NP0	50V
2105	4822 122 33216	CAP.CHIP	270PF	5%NP0	50V
2106	4822 122 33216	CAP.CHIP	270PF	5%NP0	50V
2107	4822 122 33216	CAP.CHIP	270PF	5%NP0	50V
2108	4822 122 33216	CAP.CHIP	270PF	5%NP0	50V
2109	4822 122 33216	CAP.CHIP	270PF	5%NP0	50V
2110	4822 122 33496	CAP.CHIP	100NF	10%X7R	63V
2111	4822 122 33496	CAP.CHIP	100NF	10%X7R	63V
2112	4822 122 33496	CAP.CHIP	100NF	10%X7R	63V
2113	5322 122 32659	CAP.CHIP	33PF	5%	50V
2114	5322 122 33869	CAP.CHIP	15PF	5%NP0	63V
2117	4822 122 33496	CAP.CHIP	100N	F10%X7R	63V
2118	4822 122 33216	CAP.CHIP	270PF	5%NP0	50V
2119	4822 122 33177	CAP.CHIP	10NF	20%X7R	50V
2120	4822 122 33216	CAP.CHIP	270PF	5%NP0	50V
2121	4822 122 33216	CAP.CHIP	270PF	5%NP0	50V
2122	4822 122 33216	CAP.CHIP	270PF	5%NP0	50V
2123	4822 122 33216	CAP.CHIP	270PF	5%NP0	50V
2125	4822 122 33216	CAP.CHIP	270PF	5%NP0	50V
2126	4822 122 33216	CAP.CHIP	270PF	5%NP0	50V
2127	4822 122 33216	CAP.CHIP	270PF	5%NP0	50V
2128	4822 122 33216	CAP.CHIP	270PF	5%NP0	50V
2129	4822 122 33216	CAP.CHIP	270PF	5%NP0	50V
2130	4822 122 33216	CAP.CHIP	270PF	5%NP0	50V
2131	4822 122 33216	CAP.CHIP	270PF	5%NP0	50V
2132	4822 122 33515	CAP.CHIP	82PF	5%NP0	63V
2133	5322 122 32448	CAP.CERAMIC	10PF	5%	50V
2134	4822 122 33216	CAP.CHIP	270PF	5%NP0	50V
2135	4822 122 33216	CAP.CHIP	270PF	5%NP0	50V
2136	4822 122 33216	CAP.CHIP	270PF	5%NP0	50V
2137	4822 122 33216	CAP.CHIP	270PF	5%NP0	50V
2138	4822 122 33216	CAP.CHIP	270PF	5%NP0	50V
2139	4822 122 33216	CAP.CHIP	270PF	5%NP0	50V
2140	4822 122 33496	CAP.CHIP	100NF	10%X7R	63V
2141	4822 122 33496	CAP.CHIP	100NF	10%X7R	63V
2142	4822 122 33496	CAP.CHIP	100NF	10%X7R	63V
2143	4822 122 33496	CAP.CHIP	100NF	10%X7R	63V
2144	4822 122 33496	CAP.CHIP	100NF	10%X7R	63V
2145	4822 122 33496	CAP.CHIP	100NF	10%X7R	63V
2146	4822 122 33496	CAP.CHIP	100NF	10%X7R	63V
2147	4822 122 33496	CAP.CHIP	100NF	10%X7R	63V
2148	4822 122 32566	CAP.CHIP	3,9NF	10%X7R	63V
2149	5322 122 31865	CAP.CHIP	1,5NF	10%X7R	63V
2150	4822 122 33216	CAP.CHIP	270PF	5%NP0	50V
2151	4822 122 33216	CAP.CHIP	270PF	5%NP0	50V
2152	4822 122 33216	CAP.CHIP	270PF	5%NP0	50V
2153	4822 122 33216	CAP.CHIP	270PF	5%NP0	50V
2155	4822 122 33496	CAP.CHIP	100NF	10%X7R	63V
2156	4822 122 32566	CAP.CHIP	3,9NF	10%X7R	63V
2157	4822 124 20678	CAP.ELECTROLYT.	47UF	50%	10V
2159	4822 122 33496	CAP.CHIP	100NF	10%X7R	63V
2160	4822 051 20008	RES.CHIP	0R00	JUMP.(0805)	
2161	4822 122 33216	CAP.CHIP	270PF	5%NP0	50V
2200	4822 122 33496	CAP.CHIP	100NF	10%X7R	63V
2201	4822 124 80707	CAP.ELECTROLYT.	2200UF	20%	25V
2202	4822 124 23255	CAP.ELECTROLYT.	100UF	16V	
2203	4822 122 32566	CAP.CHIP	3,9NF	10%X7R	63V
2204	4822 122 32566	CAP.CHIP	3,9NF	10%X7R	63V
2205	4822 122 33496	CAP.CHIP	100NF	10%X7R	63V
2206	4822 124 22646	CAP.ELECTROLYT.	47UF	20%	16V
2207	4822 122 33177	CAP.CHIP	10NF	20%X7R	50V
2208	4822 122 33496	CAP.CHIP	100NF	10%X7R	63V
2209	4822 124 23255	CAP.ELECTROLYT.	100UF	16V	
2210	4822 122 33496	CAP.CHIP	100NF	10%X7R	63V
2211	4822 124 80707	CAP.ELECTROLYT.	2200UF	20%	25V
2212	4822 124 20697	CAP.ELECTROLYT.	10UF	50%	25V
2213	4822 124 20722	CAP.ELECTROLYT.	1UF	50%	63V
2215	5322 124 10512	CAP.ELECTROLYT.	68UF	20%	16V
2216	4822 122 33496	CAP.CHIP	100NF	10%X7R	63V
2217	4822 122 33496	CAP.CHIP	100NF	10%X7R	63V
2218	4822 122 33178	CAP.CHIP	1NF	20%X7R	50V
2230	4822 122 33496	CAP.CHIP	100NF	10%X7R	63V
2231	4822 122 32627	CAP.CERAMIC	2.7NF	10%X7R	50V
2233	4822 122 33496	CAP.CHIP	100NF	10%X7R	63V
2300	4822 122 33216	CAP.CHIP	270PF	5%NP0	50V
2301	4822 122 32566	CAP.CHIP	3,9NF	10%X7R	63V
2304	4822 122 33496	CAP.CHIP	100NF	10%X7R	63V
2305	4822 124 20722	CAP.ELECTROLYT.	1UF	50%	63V
2306	4822 124 20722	CAP.ELECTROLYT.	1UF	50%	63V
2400	4822 122 33496	CAP.CHIP	100NF	10%X7R	63V
2401	4822 122 32566	CAP.CHIP	3,9NF	10%X7R	63V
2402	4822 122 32566	CAP.CHIP	3,9NF	10%X7R	63V
2403	4822 122 32566	CAP.CHIP	3,9NF	10%X7R	63V
2404	4822 122 32566	CAP.CHIP	3,9NF	10%X7R	63V
2405	4822 122 33496	CAP.CHIP	100NF	10%X7R	63V
2406	5322 124 10512	CAP.ELECTROLYT.	68UF	20%	16V
2407	4822 122 33496	CAP.CHIP	100NF	10%X7R	63V
2408	4822 124 11453	CAP.TANTAL	1UF	20%	16V
2409	4822 122 33496	CAP.CHIP	100NF	10%X7R	63V
2410	4822 124 11453	CAP.TANTAL	1UF	20%	16V
2411	4822 122 33178	CAP.CHIP	1NF	20%X7R	50V
2412	4822 122 33178	CAP.CHIP	1NF	20%X7R	50V
2413	4822 122 33178	CAP.CHIP	1NF	20%X7R	50V
2414	4822 122 33178	CAP.CHIP	1NF	20%X7R	50V
2415	4822 122 33178	CAP.CHIP	1NF	20%X7R	50V
2416	4822 122 33496	CAP.CHIP	100NF	10%X7R	63V
2417	4822 122 33496	CAP.CHIP	100NF	10%X7R	63V
2418	4822 122 33496	CAP.CHIP	100NF	10%X7R	63V
2419	4822 122 33496	CAP.CHIP	100NF	10%X7R	63V
2420	4822 124 40433	CAP.ELECTROLYT.	47UF	20%	25V
2421	4822 124 40433	CAP.ELECTROLYT.	47UF	20%	25V
2422	4822 124 40433	CAP.ELECTROLYT.	47UF	20%	25V
2423	4822 124 40433	CAP.ELECTROLYT.	47UF	20%	25V
2426	4822 122 33178	CAP.CHIP	1NF	20%X7R	50V
2427	4822 122 33178	CAP.CHIP	1NF	20%X7R	50V
2501	4822 122 33173	CAP.CHIP	560PF	10%X7R	50V
2502	4822 122 33173	CAP.CHIP	560PF	10%X7R	50V
2503	4822 124 20678	CAP.ELECTROLYT.	47UF	5%	10V
2504	4822 122 32646	CAP.CERAMIC	5,6NF	10%X7R	50V
2505	4822 122 33496	CAP.CHIP	100NF	10%X7R	63V
2507	4822 122 33496	CAP.CHIP	100NF	10%X7R	63V
2509	4822 122 33496	CAP.CHIP	100NF	10%X7R	63V
2510	4822 122 33496	CAP.CHIP	100NF	10%X7R	63V
2511	4822 122 33173	CAP.CHIP	560PF	10%X7R	50V
2512	4822 122 33173	CAP.CHIP	560PF	10%X7R	50V
2513	4822 124 20678	CAP.ELECTROLYT.	47UF	5%	10V
2514	4822 122 32646	CAP.CERAMIC	5,6NF	10%X7R	50V
2515	4822 122 33496	CAP.CHIP	100NF	10%X7R	63V
2520	4822 124 20697	CAP.ELECTROLYT.	10UF	5%	25V
2521	4822 124 20678	CAP.ELECTROLYT.	47UF	5%	10V
2524	4822 122 33178	CAP.CHIP	1NF	20%X7R	50V
2525	4822 122 33496	CAP.CHIP	100NF	10%X7R	63V
2526	4822 124 20697	CAP.ELECTROLYT.	10UF	5%	25V
2527	4822 124 11453	CAP.TANTAL	1UF	20%	16V
2535	4822 124 11453	CAP.TANTAL	1UF	20%	16V
2536	4822 124 11453	CAP.TANTAL	1UF	20%	16V
2537	4822 122 33496	CAP.CHIP	100NF	10%X7R	63V
2538	4822 122 33496	CAP.CHIP	100NF	10%X7R	63V
2540	4822 124 20697	CAP.ELECTROLYT.	10UF	5%	25V
2541	4822 124 20697	CAP.ELECTROLYT.	10UF	5%	25V
2542	4822 124 11453	CAP.TANTAL	1UF	20%	16V
2543	4822 122 33496	CAP.CHIP	100NF	10%X7R	63V
2544	4822 122 32627	CAP.CERAMIC	2.7NF	10%X7R	50V
2545	4822 122 33496	CAP.CHIP	100NF	10%X7R	63V
2546	4822 122 32627	CAP.CERAMIC	2.7NF	10%X7R	50V
2547	4822 122 32627	CAP.CERAMIC	2.7NF	10%X7R	50V
2548	4822 122 32627	CAP.CERAMIC	2.7NF	10%X7R	50V
2549	4822 122 32627	CAP.CERAMIC	2.7NF	10%X7R	50V
2550	4822 122 32627	CAP.CERAMIC	2.7NF	10%X7R	50V
2551	4822 122 33496	CAP.CHIP	100NF	10%X7R	63V
2552	4822 124 20697	CAP.ELECTROLYT.	10UF	5%	25V

RESISTORS

3100	4822 051 20101	RES.CHIP	100R00	5%	0,1W
3101	4822 051 20101	RES.CHIP	100R00	5%	0,1W
3105	4822 051 20101	RES.CHIP	100R00	5%	0,1W
3108	4822 051 20102	RES.CHIP	1K00	5%	0,1W
3109	4822 051 20102	RES.CHIP	1K00	5%	0,1W
3110	4822 051 20101	RES.CHIP	100R00	5%	0,1W
3113	4822 051 20102	RES.CHIP	1K00	5%	0,1W
3118	4822 051 20222	RES.CHIP	2K20	5%	0,1W
3123	4822 051 20101	RES.CHIP	100R00	5%	0,1W
3127	4822 051 20109	RES.CHIP	10R00	5%	0,1W
3128	4822 051 20102	RES.CHIP	1K00	5%	0,1W
3129	4822 051 20332	RES.CHIP	3K30	5%	0,1W
3133	4822 051 20183	RES.CHIP	18K00	5%	0,1W
3139	4822 051 20101	RES.CHIP	100R00	5%	0,1W
3140	4822 051 20101	RES.CHIP	100R00	5%	0,1W
3141	4822 051 20101	RES.CHIP	100R00	5%	0,1W
3142	4822 051 20101	RES.CHIP	100R00	5%	0,1W
3143	4822 051 20101	RES.CHIP	100R00	5%	0,1W
3155	4822 051 20101	RES.CHIP	100R00	5%	0,1W
3156	4822 051 20101	RES.CHIP	100R00	5%	0,1W
3157	4822 051 20101	RES.CHIP	100R00	5%	0,1W
3158	4822 051 20101	RES.CHIP	100R00	5%	0,1W
3159	4822 051 20101	RES.CHIP	100R00	5%	0,1W
3160	4822 051 20101	RES.CHIP	100R00	5%	0,1W
3161	4822 051 20101	RES.CHIP	100R00	5%	0,1W
3162	4822 051 20471	RES.CHIP	470R00	5%	0,1W
3163	4822 051 20479	RES.CHIP	47R00	5%	0,1W
3164	4822 051 20479	RES.CHIP	47R00	5%	0,1W
3165	4822 051 20101	RES.CHIP	100R00	5%	0,1W
3166	4822 051 20479	RES.CHIP	47R00	5%	0,1W
3167	4822 051 20101	RES.CHIP	100R00	5%	0,1W
3168	4822 051 20101	RES.CHIP	100R00	5%	0,1W
3187	4822 051 20101	RES.CHIP	100R00	5%	0,1W
3188	4822 051 20101	RES.CHIP	100R00	5%	0,1W
3189	4822 051 20101	RES.CHIP	100R00	5%	0,1W
3190	4822 051 20122	RES.CHIP	1K20	5%	0,1W
3193	4822 051 20101	RES.CHIP	100R00	5%	0,1W
3194	4822 051 20101	RES.CHIP	100R00	5%	0,1W
3195	4822 051 20101	RES.CHIP	100R00	5%	0,1W
3196	4822 051 20101	RES.CHIP	100R00	5%	0,1W
3202	4822 051 20222	RES.CHIP	2K20	5%	0,1W
3203	4822 051 20223	RES.CHIP	22K00	5%	0,1W
3206	4822 051 20102	RES.CHIP	1K00	5%	0,1W
3207	4822 051 20102	RES.CHIP	1K00	5%	0,1W
3209	4822 051 20102	RES.CHIP	1K00	5%	0,1W
3210	4822 051 20102	RES.CHIP	1K00	5%	0,1W
3211	4822 051 20223	RES.CHIP	22K00	5%	0,1W
3212	4822 051 20222	RES.CHIP	2K20	5%	0,1W
3214	4822 051 20104	RES.CHIP	100K00	5%	0,1W
3217	4822 051 20222	RES.CHIP	2K20	5%	0,1W
3219	4822 116 83864	RES.METAL FILM	10K	5%	0,5W
3220	4822 051 20223	RES.CHIP	22K00	5%	0,1W
3221	4822 051 20105	RES.CHIP	1M00	5%	0,1W
3222	4822 051 20104	RES.CHIP	100K00	5%	0,1W
3223	4822 116 52227	RES.METAL FILM	620E	5%	0,5W
3226	4822 051 20101	RES.CHIP	100R00	5%	0,1W
3227	4822 051 20102	RES.CHIP	1K00	5%	0,1W
3229	4822 051 20223	RES.CHIP	22K00	5%	0,1W
3230	4822 051 20474	RES.CHIP	470K00	5%	0,1W
3231	4822 051 20473	RES.CHIP	47K00	5%	0,1W
3300	4822 051 20471	RES.CHIP	470R00	5%	0,1W
3301	4822 051 20471	RES.CHIP	470R00	5%	0,1W
3302	4822 051 20683	RES.CHIP	68K00	5%	0,1W
3303	4822 051 20153	RES.CHIP	15K00	5%	0,1W
3304	4822 116 52291	RES.METAL FILM	56K	5%	0,5W
3305	4822 051 20223	RES.CHIP	22K00	5%	0,1W
3306	4822 051 20471	RES.CHIP	470R00	5%	0,1W
3307	4822 051 20471	RES.CHIP	470R00	5%	0,1W
3308	4822 051 20223	RES.CHIP	22K00	5%	0,1W
3309	4822 051 20223	RES.CHIP	22K00	5%	0,1W
3310	4822 051 20223	RES.CHIP	22K00	5%	0,1W
3311	4822 051 20101	RES.CHIP	100R00	5%	0,1W
3312	4822 051 20101	RES.CHIP	100R00	5%	0,1W
3313	4822 051 20101	RES.CHIP	100R00	5%	0,1W
3314	4822 051 20101	RES.CHIP	100R00	5%	0,1W
3315	4822 051 20101	RES.CHIP	100R00	5%	0,1W
3317	4822 116 83864	RES.METAL FILM	10K	5%	0,5W
3318	4822 051 20332	RES.CHIP	3K30	5%	0,1W
3320	4822 051 20222	RES.CHIP	2K20	5%	0,1W
3324	4822 051 20222	RES.CHIP	2K20	5%	0,1W
3400	4822 116 52182	RES.METAL FILM	15E	5%	0,5W
3401	4822 116 52182	RES.METAL FILM	15E	5%	0,5W
3402	4822 051 20222	RES.CHIP	2K20	5%	0,1W
3404	4822 051 20472	RES.CHIP	4K70	5%	0,1W
3405	4822 051 20102	RES.CHIP	1K00	5%	0,1W
3406	4822 051 20102	RES.CHIP	1K00	5%	0,1W
3408	4822 116 52182	RES.METAL FILM	15E	5%	0,5W
3409	4822 116 52182	RES.METAL FILM	15E	5%	0,5W
3410	4822 051 20123	RES.CHIP	12K00	5%	0,1W
3411	4822 051 20222	RES.CHIP	2K20	5%	0,1W
3412	4822 051 20123	RES.CHIP	12K00	5%	0,1W
3413	4822 051 20222	RES.CHIP	2K20	5%	0,1W
3414	4822 051 20102	RES.CHIP	1K00	5%	0,1W
3415	4822 051 20102	RES.CHIP	1K00	5%	0,1W
3416	4822 051 20102	RES.CHIP	1K00	5%	0,1W
3417	4822 051 20102	RES.CHIP	1K00	5%	0,1W
3423	4822 051 20223	RES.CHIP	22K00	5%	0,1W
3424	4822 051 20105	RES.CHIP	1M00	5%	0,1W
3425	4822 051 20105	RES.CHIP	1M00	5%	0,1W
3426	4822 051 20105	RES.CHIP	1M00	5%	0,1W
3427	4822 051 20105	RES.CHIP	1M00	5%	0,1W
3428	4822 051 20102	RES.CHIP	1K00	5%	0,1W
3501	4822 051 20473	RES.CHIP	47K00	5%	0,1W
3502	4822 051 20473	RES.CHIP	47K00	5%	0,1W
3503	4822 051 20101	RES.CHIP	100R00	5%	0,1W
3505	4822 051 20474	RES.CHIP	470K00	5%	0,1W
3506	4822 051 20273	RES.CHIP	27K00	5%	0,1W
3508	4822 051 20332	RES.CHIP	3K30	5%	0,1W
3509	4822 051 20222	RES.CHIP	2K20	5%	0,1W
3511	4822 051 20473	RES.CHIP	47K00	5%	0,1W
3512	4822 051 20473	RES.CHIP	47K00	5%	0,1W
3513	4822 051 20101	RES.CHIP	100R00	5%	0,1W
3515	4822 051 20474	RES.CHIP	470K00	5%	0,1W
3516	4822 051 20273	RES.CHIP	27K00	5%	0,1W
3518	4822 051 20332	RES.CHIP	3K30	5%	0,1W
3519	4822 051 20222	RES.CHIP	2K20	5%	0,1W
3520	4822 051 20479	RES.CHIP	47R00	5%	0,1W
3522	4822 051 20223	RES.CHIP	22K00	5%	0,1W
3523	4822 051 20223	RES.CHIP	22K00	5%	0,1W
3524	4822 051 20104	RES.CHIP	100K00	5%	0,1W
3525	4822 051 20102	RES.CHIP	1K00	5%	0,1W
3526	4822 051 20221	RES.CHIP	220R00	5%	0,1W
3527	4822 051 20104	RES.CHIP	100K00	5%	0,1W
3529	4822 051 20102	RES.CHIP	1K00	5%	0,1W
3531	4822 051 20102	RES.CHIP	1K00	5%	0,1W
3532	4822 051 20102	RES.CHIP	1K00	5%	0,1W
3533	4822 100 12211	POTM.TRM	1K	DOLBY ADJUST	
3534	4822 100 12211	POTM.TRM	1K	DOLBY ADJUST	
3540	4822 051 20223	RES.CHIP	22K00	5%	0,1W
3541	4822 051 20223	RES.CHIP	22K00	5%	0,1W
3542	4822 051 10183	RES.CHIP	18K00	2%	0,25W
3543	4822 051 20223	RES.CHIP	22K00	5%	0,1W
3544	4822 051 20561	RES.CHIP	560R00	5%	0,1W
3546	4822 051 20223	RES.CHIP	22K00	5%	0,1W
3547	4822 051 20561	RES.CHIP	560R00	5%	0,1W
3554	4822 051 20223	RES.CHIP	22K00	5%	0,1W
3557	4822 051 20223	RES.CHIP	22K00	5%	0,1W
3558	4822 051 20223	RES.CHIP	22K00	5%	0,1W
3560	4822 051 20479	RES.CHIP	47R00	5%	0,1W
4006	4822 051 20008	RES.CHIP	0R00	JUMP.	(0805)
4101	4822 051 20222	RES.CHIP	2K20	5%	0,1W
4103	4822 051 20222	RES.CHIP	2K20	5%	0,1W
4104	4822 051 20101	RES.CHIP	100R00	5%	0,1W
4105	4822 051 20101	RES.CHIP	100R00	5%	0,1W
4107	4822 051 20101	RES.CHIP	100R00	5%	0,1W
4108	4822 051 20223	RES.CHIP	22K00	5%	0,1W
4109	4822 116 83883	RES.METAL FILM	470R	5%	0,5W
4113	4822 051 20473	RES.CHIP	47K00	5%	0,1W
4115	4822 051 20101	RES.CHIP	100R00	5%	0,1W
4116	4822 051 20109	RES.CHIP	10R00	5%	0,1W
4117	4822 051 20109	RES.CHIP	10R00	5%	0,1W
4118	4822 051 20109	RES.CHIP	10R00	5%	0,1W
4119	4822 051 20109	RES.CHIP	10R00	5%	0,1W
4120	4822 051 20101	RES.CHIP	100R00	5%	0,1W

COILS

5100	4822 152 20677	COIL	10MUH
5101	4822 156 21719	COIL	1,5UH
5104	4822 152 20678	COIL	33UH
5200	4822 157 71259	COIL	FILTER ASSY

DIODES

6104	5322 130 82039	DIODE,REFERENCE	BZX84-C27
6107	4822 252 60125	SPARK GAP	DSP201
6108	4822 130 80125	DIODE,REFERENCE	BZX84-C5V6
6201	5322 130 31928	DIODE,CHIP	BAS16
6203	5322 130 34331	DIODE,CHIP	BAV70
6204	5322 130 31928	DIODE,CHIP	BAS16
6205	5322 130 31928	DIODE,CHIP	BAS16
6206	5322 130 34331	DIODE,CHIP	BAV70
6207	5322 130 34331	DIODE,CHIP	BAV70
6208	5322 130 33662	DIODE,REFERENCE	BZX84-C15
6210	4822 130 80751	DIODE	1S1885 A
6211	5322 130 33662	DIODE,REFERENCE	BZX84-C15
6213	5322 130 80212	DIODE,REFERENCE	BZX84-C18
6214	5322 130 80212	DIODE,REFERENCE	BZX84-C18
6215	4822 130 83799	DIODE	PRLL5818
6216	5322 130 34337	DIODE,CHIP	BAV99
6300	4822 130 80125	DIODE,REFERENCE	BZX84-C5V6
6301	4822 130 80125	DIODE,REFERENCE	BZX84-C5V6
6302	4822 130 80125	DIODE,REFERENCE	BZX84-C5V6
6401	4822 130 80125	DIODE,REFERENCE	BZX84-C5V6
6402	4822 130 80125	DIODE,REFERENCE	BZX84-C5V6
6403	4822 130 80125	DIODE,REFERENCE	BZX84-C5V6
6404	4822 130 80125	DIODE,REFERENCE	BZX84-C5V6
6405	5322 130 31928	DIODE,CHIP	BAS16
6406	5322 130 31928	DIODE,CHIP	BAS16
6407	5322 130 31928	DIODE,CHIP	BAS16
6408	5322 130 31928	DIODE,CHIP	BAS16

TRANSISTORS AND IC's

7100	4822 130 42705	TRANSISTOR,CHIP	BC847
7101	4822 130 42705	TRANSISTOR,CHIP	BC847
7102	4822 130 42705	TRANSISTOR,CHIP	BC847
7103	4822 130 61233	TRANSISTOR,CHIP	BC857
7104	4822 130 61233	TRANSISTOR,CHIP	BC857
7105	4822 130 42705	TRANSISTOR,CHIP	BC847
7106	4822 130 61233	TRANSISTOR,CHIP	BC857
7107	4822 209 52603	I.C.E-PROM	CAT24C08JI
7108	4822 209 33841	INTEGR.CIRCUIT	E100.20
7109	4822 209 33882	MICROPROCESSOR	P83CE558EFB+RC2
7110	4822 130 42705	TRANSISTOR,CHIP	BC847
7111	4822 130 42705	TRANSISTOR,CHIP	BC847
7200	4822 130 40823	TRANSISTOR	BD137
7201	4822 130 40995	TRANSISTOR	BD438
7202	5322 130 60803	TRANSISTOR	BST82
7203	4822 209 72227	INTEGR.CIRCUIT	L4916
7204	4822 209 33883	INTEGR.CIRCUIT	TLE4262G
7205	4822 130 61233	TRANSISTOR,CHIP	BC857
7206	4822 130 42705	TRANSISTOR,CHIP	BC847
7207	4822 130 42705	TRANSISTOR,CHIP	BC847
7208	4822 130 61233	TRANSISTOR,CHIP	BC857
7209	4822 130 61233	TRANSISTOR,CHIP	BC857
7210	4822 130 61233	TRANSISTOR,CHIP	BC857
7211	4822 130 42705	TRANSISTOR,CHIP	BC847
7212	5322 130 60803	TRANSISTOR	BST82
7213	4822 130 42705	TRANSISTOR,CHIP	BC847
7214	5322 130 60803	TRANSISTOR	BST82
7300	4822 130 61233	TRANSISTOR,CHIP	BC857
7301	4822 130 42705	TRANSISTOR,CHIP	BC847
7302	4822 130 61233	TRANSISTOR,CHIP	BC857
7402	5322 209 32344	INTEGR.CIRCUIT	TDA7052AT/N2
7403	5322 209 32344	INTEGR.CIRCUIT	TDA7052AT/N2
7404	4822 130 42705	TRANSISTOR,CHIP	BC847
7405	4822 130 42705	TRANSISTOR,CHIP	BC847
7500	4822 130 42705	TRANSISTOR,CHIP	BC847
7501	4822 130 42705	TRANSISTOR,CHIP	BC847
7502	4822 130 42705	TRANSISTOR,CHIP	BC847
7503	4822 209 33636	INTEGR.CIRCUIT	HA12161FP
7504	4822 209 33884	INTEGR.CIRCUIT	BA3430FS

ELECTRICAL PARTS FRONT PWB

3100	4822 051 10182	RES.CHIP	1K80	2%	0,25W
3101	4822 051 10182	RES.CHIP	1K80	2%	0,25W
3102	4822 051 10182	RES.CHIP	1K80	2%	0,25W
3103	4822 051 10182	RES.CHIP	1K80	2%	0,25W
3104	4822 117 11139	RES.METAL FILM	1K5	1%	0,1W
3105	4822 051 10182	RES.CHIP	1K80	2%	0,25W
3106	4822 051 20221	RES.CHIP	220R00	5%	0,1W
3107	4822 051 10182	RES.CHIP	1K80	2%	0,25W
3108	4822 051 10182	RES.CHIP	1K80	2%	0,25W
3109	4822 051 20101	RES.CHIP	100R00	5%	0,1W
3110	4822 051 20101	RES.CHIP	100R00	5%	0,1W
3111	4822 051 20101	RES.CHIP	100R00	5%	0,1W
3112	4822 051 20101	RES.CHIP	100R00	5%	0,1W
3113	4822 051 20122	RES.CHIP	1K20	5%	0,1W
3114	4822 051 10182	RES.CHIP	1K80	2%	0,25W
3115	4822 051 20821	RES.CHIP	820R00	5%	0,1W
3116	4822 051 10182	RES.CHIP	1K80	2%	0,25W
3117	4822 051 20821	RES.CHIP	820R00	5%	0,1W
3118	4822 051 10182	RES.CHIP	1K80	2%	0,25W
3122	4822 051 20821	RES.CHIP	820R00	5%	0,1W
3123	4822 051 20821	RES.CHIP	820R00	5%	0,1W
3124	4822 051 20101	RES.CHIP	100R00	5%	0,1W
3125	4822 051 20122	RES.CHIP	1K20	5%	0,1W
3126	4822 051 20821	RES.CHIP	820R00	5%	0,1W
3130	4822 051 20821	RES.CHIP	820R00	5%	0,1W
3131	4822 117 11139	RES.METAL FILM	1K5	1%	0,1W
3132	4822 051 20102	RES.CHIP	1K00	5%	0,1W
3133	4822 051 20821	RES.CHIP	820R00	5%	0,1W
3134	4822 051 20821	RES.CHIP	820R00	5%	0,1W
3135	4822 051 20102	RES.CHIP	1K00	5%	0,1W
3200	4822 051 20101	RES.CHIP	100R00	5%	0,1W
3201	4822 051 20101	RES.CHIP	100R00	5%	0,1W
3202	4822 051 20101	RES.CHIP	100R00	5%	0,1W
3203	4822 051 20101	RES.CHIP	100R00	5%	0,1W
6112	5322 130 34331	DIODE,CHIP	BAV70		
7100	4822 130 42705	TRANSISTOR,CHIP	BC847		
7102	4822 130 42705	TRANSISTOR,CHIP	BC847		
7104	4822 130 42705	TRANSISTOR,CHIP	BC847		
7106	4822 130 42705	TRANSISTOR,CHIP	BC847		
7108	4822 130 42705	TRANSISTOR,CHIP	BC847		
7200	4822 130 41739	TRANSIST,PHOTO	BPW16N		